STEP®

SC20 Motion Control Controller Hardware Manual

让人类共享智能社会
的便利和幸福

Revised resume

The manual number is located under the cover.

Manual type	issue date	Manual number	Revised content description
SC20Hardware Manual	V1.0	first edition	
SC20Hardware Manual	V4.1		Supplement content, correct errors
SC20Hardware Manual	V4.2		Update wiring section

foreword

First of all, thank you for purchasing the product developed and produced by Xinshida technology.SCSeries programmable logic controllers and expansion modules! Before using this product, you should read this manual and the related manuals introduced in this manual carefully, and operate correctly under the premise of full attention to safety.

Kind of manual

- SCThe types of series manuals are as follows. Please refer to the corresponding manual according to the application.
- Manuals are available from our homepagehttp://www.step-sigriner.com.cn download. **SC**

Manuals used in the series

NO.	**Manual name**	content
1.	SCSeries Controller Software Operation Manual	Software installation, configuration, debugging, coding, etc.
2.	SCSeries Controller Software Programming Manual	Motion control programming, common programming libraries, instructions, etc.
3.	SC20Controller Hardware Manual	SC20Related hardware interface, wiring and maintenance
4.	SC30Controller Hardware Manual	SC30Related hardware interface, wiring and maintenance
5.	SCSeries Controller Visual Interface Operation Instructions	Visual interface related operations and programming

Notes on Copyright and Trademarks

Table of contents

Chapter 1 Before use

1.1.Safety Precautions

The following instructions must be followed in order to prevent hazards to persons or damage to property.

- Categorize and explain the degree of harm and damage caused by the wrong method of use.

⚠警告	"Matters That Could Cause Death or Serious Injury".
⚠注意	"Things that may cause minor injury or property damage".
⃠	unenforceable matter.
❗	things that must be done.

⚠警告
❗ ● Please take safety measures outside this product, so that the safety of the entire system can be guaranteed when this product fails or an abnormal situation occurs due to external reasons.
⃠ ● Do not use in an environment with flammable gas. Otherwise it may cause an explosion.
⃠ ● Do not throw this product into fire. Otherwise, the battery and electronic components may be ruptured.
⚠注意
❗ ● In order to prevent abnormal heat and smoke, the parameters used should have a certain margin compared with the guaranteed characteristics and performance parameters of this product.
⃠ ● Do not dismantle or remodel. Otherwise, it may cause abnormal heat and smoke.
⃠ ● Do not touch the terminals while the power is on. Otherwise, electric shock may result.
❗ ● Install an emergency stop circuit and an interlock circuit in the external circuit.
❗ ● Please connect the wires and connectors correctly. Poor contact between the wire and the connector can cause abnormal heat and smoke.
⃠ ● Do not perform work (connection, disassembly, etc.) while the power is on. Otherwise, electric shock may result.
❗ ● If it is not used in accordance with the method specified by our company, the protection function of the unit may be damaged.
❗ ● This product was developed and manufactured for use in an industrial environment.

1.2.Product Naming Rules

SCSeries naming convention

SC30-A6 H 2

1-2 3-4 5 6 7 8 9

SC

1-2 Serial Number

30

3-4 20: Small

30: Medium and large

40: High-performance industrial computer

31: Medium Integrated Display

32: Medium industrial computer

41: High-performance integrated display

-

5 delimiter

A

6 A: is the sub-series code

B: is the sub-series code

6

7 3: 8 axes*

4: 16 axes

5: 32 axes

6: 64 axes

7: 128 axes

H

special specification

8 L: No built-in high-speed IO board, low-speed IO board

H: Built-in high-speed IO board (support pulse axis, encoder pulse count)

2

special specification

9 6: 6 high-speed (pulse axis + ABZ encoder) modules

4: 4 high-speed (pulse axis + ABZ encoder) modules

1 general purpose IO module

3: 2 high-speed (pulse axis + ABZ encoder) modules

1 general IO module, 1 analog IO module

* : As a reference for computing power and axis capacity. The number of axes will vary slightly depending on the software implementation.

SC20of the seriesSC20-A3H

SC30-Bof the seriesSC30-B6H

Chapter 2 Outline

2.1.Basic system parameters

2.1.1. SC20System overview

Two versions with different optional modulesSC20And the rendering of the local expansion board

SC20The series motion controller is a medium-sized controller with a modular structure design.

-Strong scalability

- Each controller supports local expansion of 8 expansion modules. The local expansion module carries out module expansion through the internal bus protocol, and supports digital input/output modules and analog input/output modules. The analog input/output module adopts a 12-bit resolution conversion chip to ensure high-precision data acquisition

- The remote expansion of the rack can be carried out through various industrial fieldbuses such as Ether CAT, CAN Open, etc. It
- supports 1 Ethernet connection port, which is compatible with Ether Cat.

-Powerful Control Function

- 14-axis motion control via Ether CAT bus
- With single-axis acceleration and deceleration control function, electronic gear function, electronic cam function, CNC, robot and other motion control functions, it can also
- realize single-axis basic positioning function through high-speed IO, and the maximum frequency can reach 4 Mbps.

2.1.2.unit type

-Controller body

kind	unit	Function	Product screen printing
Controller body	SC20controller	14Axis motion controller transistorNPNoutput type	SC20_A
	Local optional axis-controlled high-speed counter module (optional)	used for2chMotor pulse control	P2E2
	Local optional ordinary digital input and output module (optional)	24V 12chdigital input, 4chdigital output.	X12Y4
	Analog-digital mixed input and output interface	2chanalog input, 4chdigital input, 4chhigh speed input, 4chdigital output.	SLT20

-local extension unit

kind	unit	Function	Product screen printing
digital module	Local expansion of ordinary digital output modules	24V 16output transistorNPNtype	Y6
	Local expansion of ordinary digital input modules	24V 16input	X6
analog module	Local expansion of ordinary analog input and output modules	24V 8input4output transistorNPNoutput type	AX4Y2

type	unit	Function	Product screen printing
digital module	EtherCATExtended remote digital input and output mixed module	24V 8Two-way configurable 16roadDI,8roadDO MOS Tube output type	SX-CD433-HR
Hybrid module	EtherCATExtended remote input and output mixing module	24V 8roadDI,8roadDO 4roadAI,4roadAO	SX-CD433-HR

2.1.3.Limitation on the number of expansion units

at mostSC20Right side of the controller8station to expand the ordinary unit.

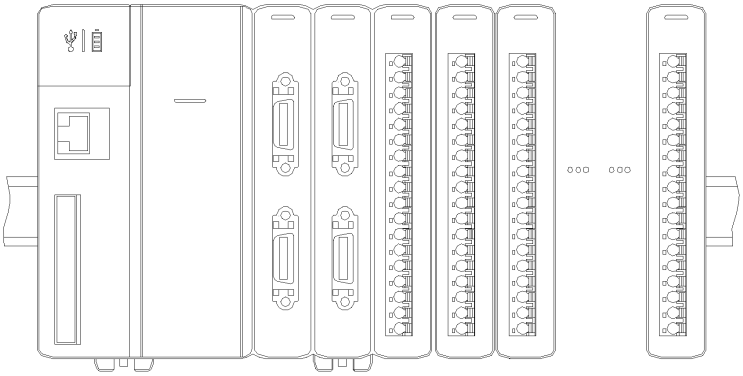

2.2.Programming Tools

2.2.1.Software usage environment and applicable cables

For programming software and software operating environment, see "SCSeries Controller Software Manual".

computer connection cable

- Please use commercially availableUSBcable.

Kind of cable	length
Ethernet100Base-TX	longest50m

- The Ethernet cable between the controller and the PC supports auto-negotiation, and the AB crystal head is directly connected or crossed.

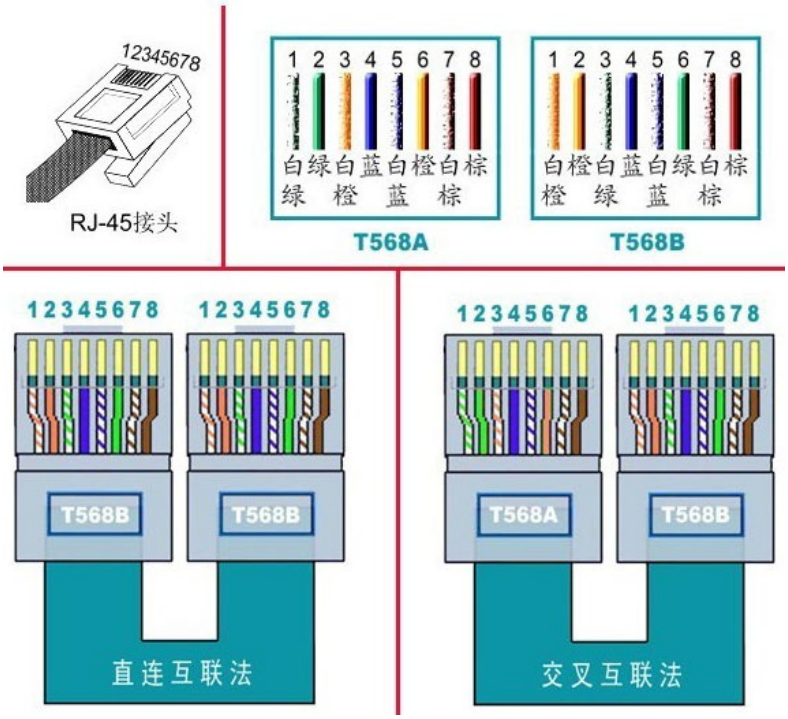

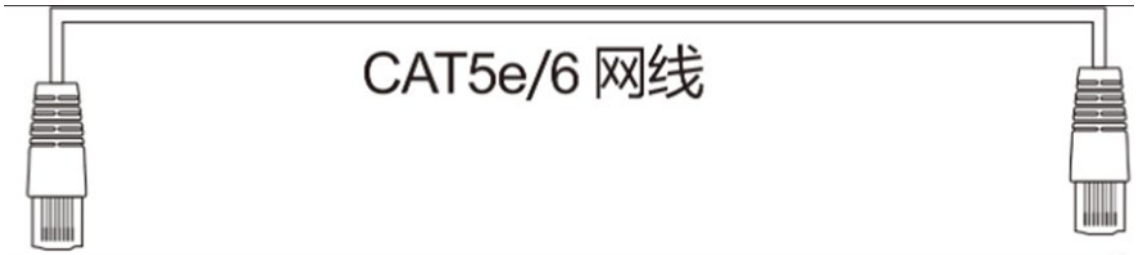

(computer side) (SC20side)

Chapter 3 Composition and Definition of Each Part of the System

3.1. SC20Controller part name and interface definition

3.1.1.List of names and functions

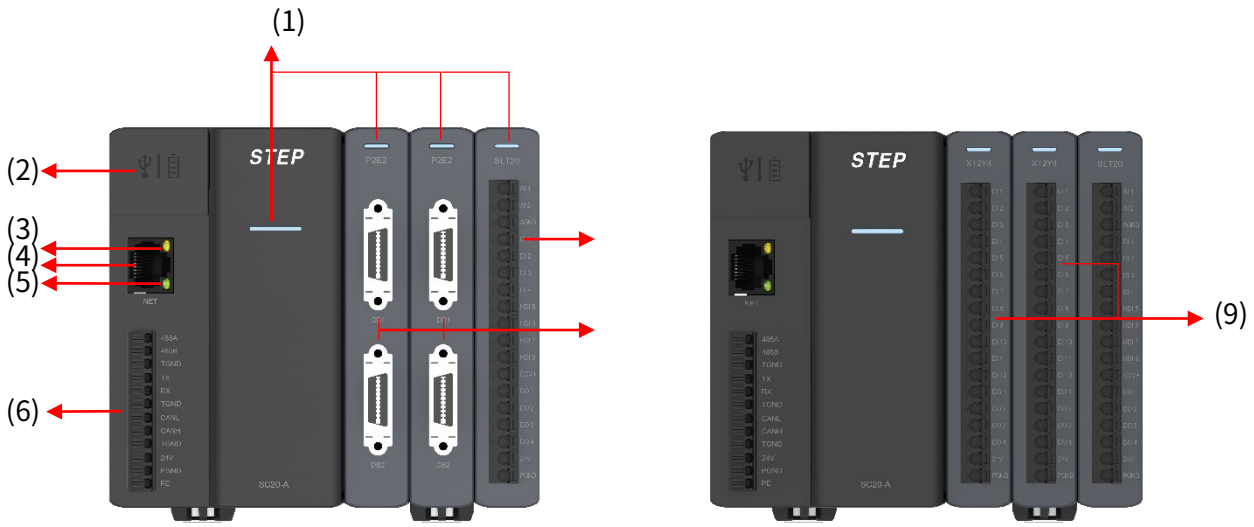

No.	name	Function
1	ledStatus indicator	is the unit status indicator See "Status Displayledname and function "
2	flip cover	Inside contains: USB-ASocket, button battery box, reset button
3	Ether Cat, EthernetStatus Indicator	YesLANport status indicator See "Status Displayledname and function "
4	LANport1	YesEther Catconnected connector. STEP.Eth1.IPdefault address192.168.0.11
5	Ether Cat, EthernetStatus Indicator	YesLANport status indicator See "Status Displayledname and function "
6	Serial port and power interface	is serial communication and24VDCPower interface See "Serial port and power interface terminal signal arrangement and definition "
7	Analog-digital mixed input and output interface	2chanalog input, 4chdigital input,4chhigh-speed digital input, 4chdigital output. See "Signal arrangement and definition of analog-digital mixed input and output terminals "
8	local optional Axis control high-speed counter module interface	It can be divided into2indivual2chAxle control motor interface (can form a4chMotor pulse control interface) See "Local optional axis control high-speed counter board terminal arrangement and definition "
9	local optional Common input and output module interface	24V 12chdigital input4chdigital output See "Local optional common input and output board terminal arrangement and definition "

3.1.2.Status Displayledname and function

No.	name	ledcolor	Function
1	module statusledshow	ledThree-color light red, blue, yellow	Display the status of the current module See "system status "
2	Ether cat, EthernetCommunication status indicator	Green, yellow.	When the connection is normal: the green indicator is always on. When data is sent and received: the green light and the yellow light flash at the same time. In case of failure: the orange light is always on, or both are off.

3.1.3.Definition of serial port and power interface

No.	name	Function
1	485A	RS485Communication+
2	485B	RS485communication-
3	TGND	Power reference ground
4	RX	RS232take over
5	TX	RS232send
6	TGND	Power reference ground
7	CANH	CAN+
8	CANL	CAN-
9	TGND	Power reference ground
10	24V	Power input 24V
11	GND	power input ground
12	PE	the earth

3.1.4.Definition of analog-digital mixed input and output interface

No.	name	Function
1	AI1	Analog input 1
2	AI2	Analog input 2
3	AGND	Analogously
4	DI1	digital input
5	DI2	digital input
6	DI3	digital input
7	DI4	digital input
8	HDI5	High-speed digital input
9	HDI6	High-speed digital input
10	HDI7	High-speed digital input
11	HDI8	High-speed digital input
12	COM+	public
13	DO1	digital output
14	DO2	digital output
15	DO3	digital output
16	DO4	digital output
17	24V	Supplemental power input
18	PGND	Supplementary power ground

3.1.5.Local optional common input and output board interface definition

No.	name	Function
1	DI1	digital input
2	DI2	digital input
3	DI3	digital input
4	DI4	digital input
5	DI5	digital input
6	DI6	digital input
7	DI7	digital input
8	DI8	digital input
9	DI9	digital input
10	DI10	digital input
11	DI11	digital input
12	DI12	digital input
13	DO1	digital output
14	DO2	digital output
15	DO3	digital output
16	DO4	digital output
17	24V	Supplemental power input
18	PGND	Supplementary power ground

3.1.6.Local optional axis control high-speed counter board interface definition

Optional axis control board high-speed counter Board Terminal Arrangement Diagram	NO.		name	use
	A_	B_		
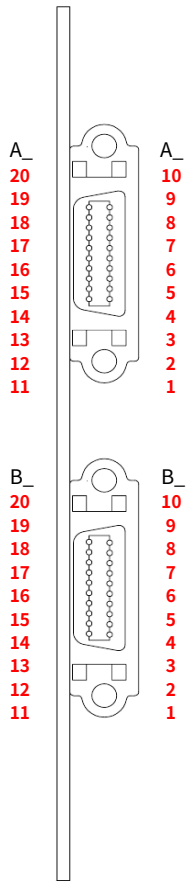	1	1	ECA1+	Encoder A
	2	2	ECA1-	Encoder A
	3	3	ECB1+	Encoder B
	4	4	ECB1-	Encoder B
	5	5	ECZ1+	Encoder Z
	6	6	ECZ1-	Encoder Z
	7	7	OPC	Reserve high-speed DI+
	8	8	PULS	Reserve high-speed DI-
	9	9	SRV_COIN	Servo positioning complete DI
	10	10	ALARM	Servo alarm DI
	11	11	+5V_ENC	Encoder power
	12	12	EGND	Encoder reference ground
	13	13	DR+	command direction
	14	14	DR-	command direction
	15	15	PU+	command pulse
	16	16	PU-	command pulse
	17	17	24V	Power Output
	18	18	GND_24V	reference place
				DO
				Alert DO

3.2.expansion unit

3.2.1. SC20Names and Functions of Parts of the Local Expansion Unit

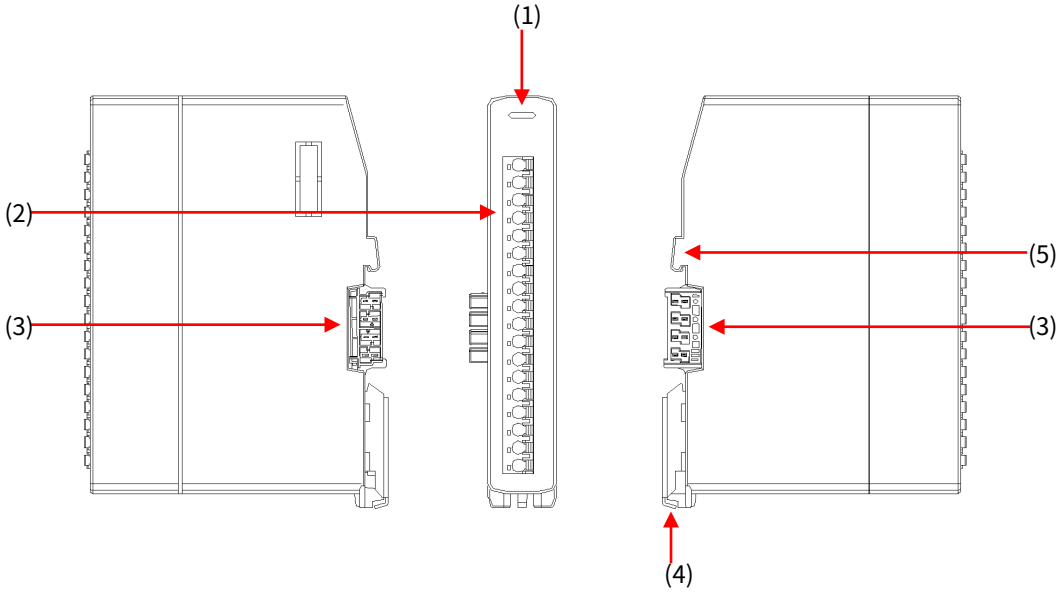

No.	name	Function
1	Status Displayled	useledDisplay module connection status
2	I/OConnector (IncludeIOstateledshow)	Connect input and output devices see"local extension numbersI/OBoard Interface Definition " See "IOstateledshow "
3	Power input interface	Provides stable power with bottom bus connection
4	DINhook up	is used to fix the body in theDINHook on the rail.
5	DINRail Mounting Section	is installed inDINpart on the rail.

3.2.2.local extensionI/OBoard Interface Definition

-Local expansion digital input board interface definition

No.	name	Function
1	DI1	digital input
2	DI2	digital input
3	DI3	digital input
4	DI4	digital input
5	DI5	digital input
6	DI6	digital input
7	DI7	digital input
8	DI8	digital input
9	DI9	digital input
10	DI10	digital input
11	DI11	digital input
12	DI12	digital input
13	DI13	digital input
14	DI14	digital input
15	DI15	digital input
16	DI16	digital input
17	COM+	public
18	NC	empty pin

-Local expansion digital output board interface definition

No.	name	Function
1	DO1	digital output
2	DO2	digital output
3	DO3	digital output
4	DO4	digital output
5	DO5	digital output
6	DO6	digital output
7	DO7	digital output
8	DO8	digital output
9	DO9	digital output
10	DO10	digital output
11	DO11	digital output
12	DO12	digital output
13	DO13	digital output
14	DO14	digital output
15	DO15	digital output
16	DO16	digital output
17	24V	IOSupplementary power

18	PGND	IOreference place

-Definition of local extension analog input and output board interface

No.	name	Function
1	AI1+	Positive analog input
2	AI1-	Analog input negative
3	AI2+	Positive analog input
4	AI2-	Analog input negative
5	AI3+	Positive analog input
6	AI3-	Analog input negative
7	AI4+	Positive analog input
8	AI4-	Analog input negative
9	AGND	Analogously
10	AO1+	Positive analog output
11	AO1-	Analog output negative
12	AO2+	Positive analog output
13	AO2-	Analog output negative
14	AGND	Analogously
15	NC	empty pin
16	NC	empty pin
17	24V	IOSupplementary power
18	PGND	IOreference place

3.3. IOstateledshow

module name	IOstateled
local communication module	Not supported, always off
Local optional common input and output modules	Input and output valid bit, greenledBright
Local optional axis control high-speed counting module	not supported, none
Local expansion digital input module	Input valid bit, greenledBright
Local expansion digital output module	output valid bit, greenledBright
Local expansion of analog input and output modules	Not supported, always off

3.4.Module silkscreen instructions

module name	Corresponding silk screen
Local analog-digital mixed input and output module	SLOT3
Local optional common input and output modules	X12Y4
Local optional axis control high-speed counting module	P2E2
Local expansion digital input module	X16
Local expansion digital output module	Y16
Local expansion of analog input and output modules	AX4Y2

Chapter 4 Installation

4.1. SC20series installation

4.1.1.Installation environment and installation space

-Installation Environment

When installing, please use it within the range of general specifications.

- Ambient temperature:-5°C~+55°C
- Ambient humidity:10%RH~90%RH(25°Cwhen there should be no condensation)
- Protection class:IP20
- Pollution level:IE33
- Use altitude: Altitude2000mthe following
- EMCAnti-interference level: ExecuteEN 61000-6-Xstandard
- Installation position: in the protective structureIP54It is used in the environment of the above control cabinet (made of metal with sufficient strength).

Do not use in the following environments.

- Places exposed to direct sunlight
- Places where condensation may occur due to rapid temperature changes
- In the environment with corrosive gas and flammable gas
- Places with a lot of dust, iron powder and salt
- Places and environments where organic solvents such as gasoline, thinner, and alcohol, or strong alkaline substances such as ammonia and sodium hydroxide may adhere
- Places that may be directly exposed to vibration or shock, and places that are directly splashed by water droplets
- In the vicinity of high-voltage power lines, high-voltage equipment, power lines, power equipment, or equipment with transmitting devices such as amateur radio, and equipment that generates large switching inrush currents (at least leave100mm)

-operate

- To avoid electrostatic damage, do not directly touch the pins of connectors.
- Please discharge the static electricity carried by the human body before operating.
- The connector on the side of the unit can only be connected to our company'sSC20series.
- Use rated temperature of80°Ccopper wire above.

-Considerations for Heat Dissipation

- For the consideration of heat dissipation, please install it in the direction shown in the figure below.
- Do not install it vertically, horizontally or upside down, otherwise it will cause insufficient heat dissipation and cause abnormal internal heating.
- Do not install it directly above equipment that generates a large amount of heat, such as heaters, transformers, and large-capacity resistors.

-installation space

- In order to ensure the ventilation space, please separate the top, bottom, left and right sides from other equipment and wiring ducts during installation.50mmabove distance.

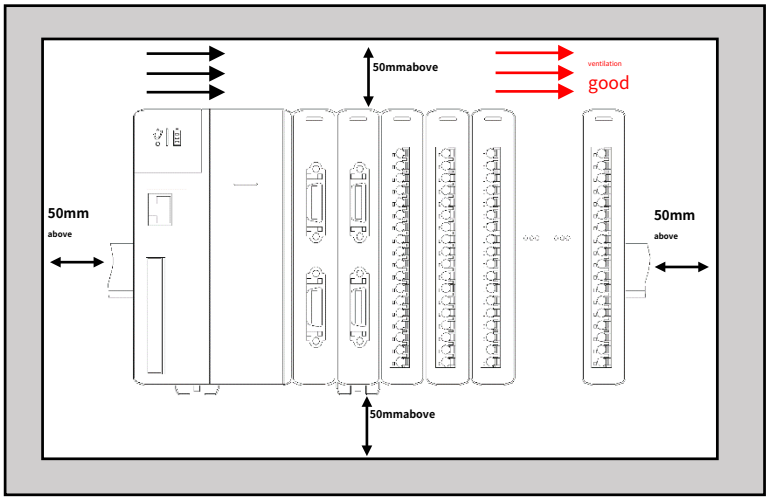

● Do not install it directly above equipment that generates a large amount of heat, such as heaters, transformers, and large-capacity resistors.

● To avoid the influence of radiation noise, please separate the surface of each unit from power lines or electromagnetic switches when installing100mmabove distance. Especially when installed on the back of the control cabinet door, ensure a certain distance from other equipment.

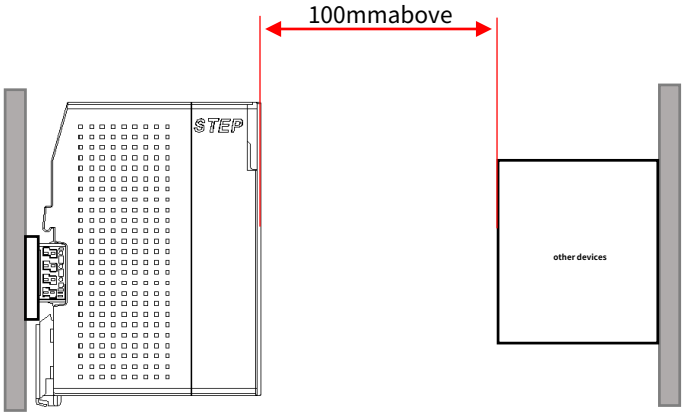

● To connect the tool software cable, make sureSC20series of mounting surfaces set aside170mmspace above.

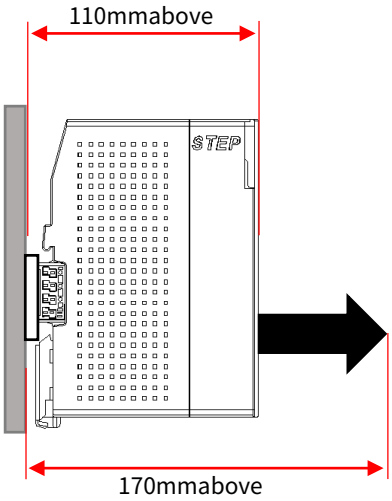

4.1.2.Unit Installation Procedure

1.Mount the bus connector on the rail.	the rail and apply force to the side of the rail (Fig.a), then).
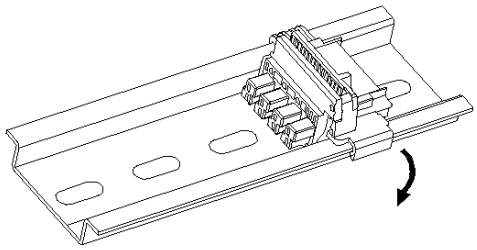	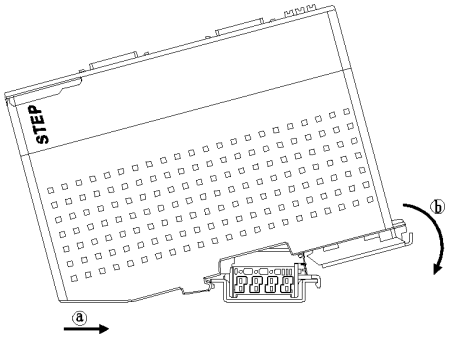
3.After you hear a "click", the metal latch snaps into placeDINRails, the installation is complete.	4.Snap down the bus connector onto the rail (Fig.a), then swipe toSC20side, and Insert the male connector pair into the female connector (Fig.b).
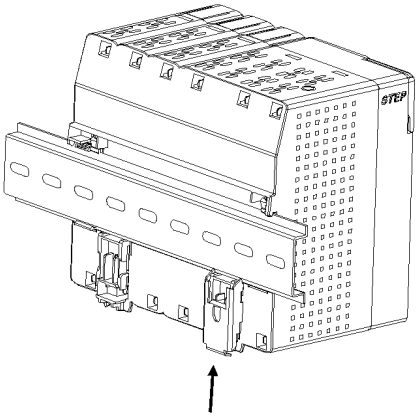	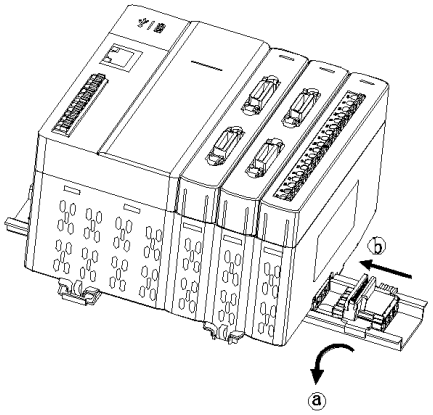
5.will expandI/Otop slide inDINguide rail (pictureda), then embed the lower endDINguide rail (Fig.b).	6.Snap the rail fasteners into the rails (Fig.a), tighten it with a screw hole driver (Fig.b),The installation is complete.
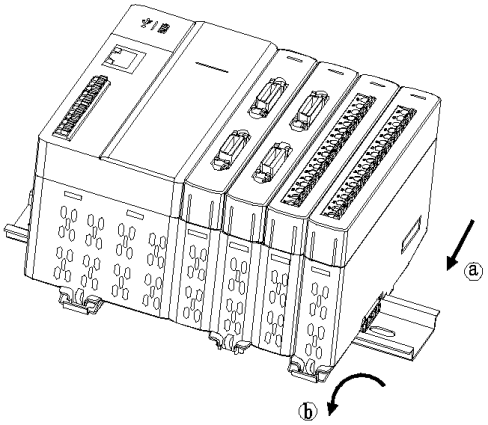	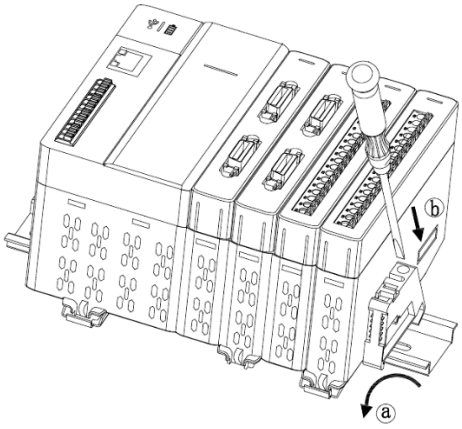

4.1.3.Disassembly of the unit

1.Use a screwdriver to unscrew the guide rail fasteners (Fig.a), and then remove it from the guide rail (Fig.b)	2. Use a screwdriver to snap down the latch (Fig.a), then pry the screwdriver towards the expansion unit,
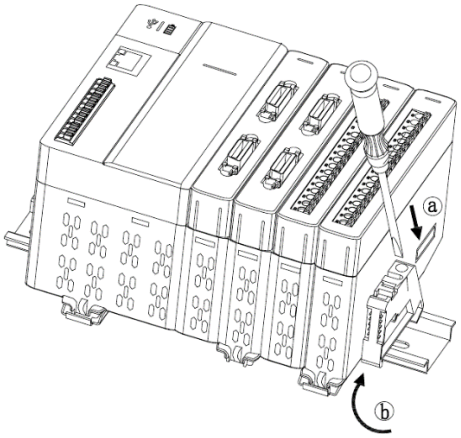	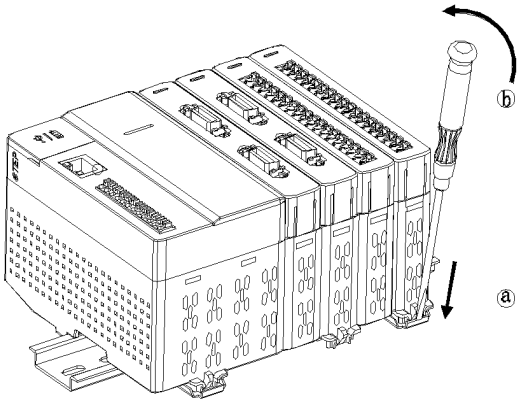
3.Lift up the side of the lock first (Fig.a), then push out to the other side (Fig.b), you can Power handle extensionl/Ounit take out	Head separation (Fig.a)Flip up the lower end of the unit ,
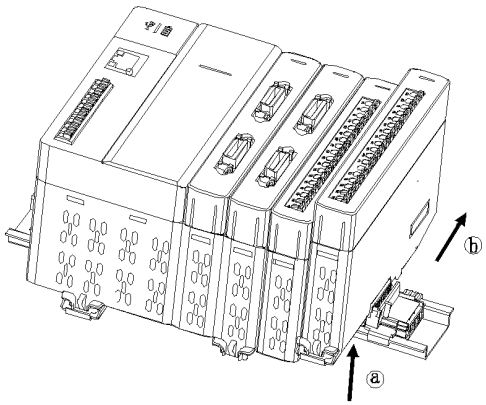	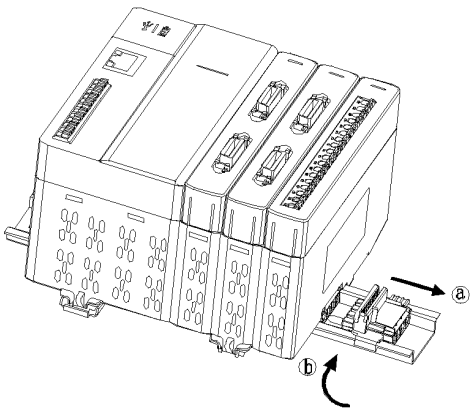
5.Use a screwdriver to snap down the latch (Fig.a)then toSC20Controller pry screwdriver , Pry open the metal latch at the bottom of the unit (as shown in the figureb) .	6.Pull up the side of the unit latch (Fig.a), then push forward (Fig.b).
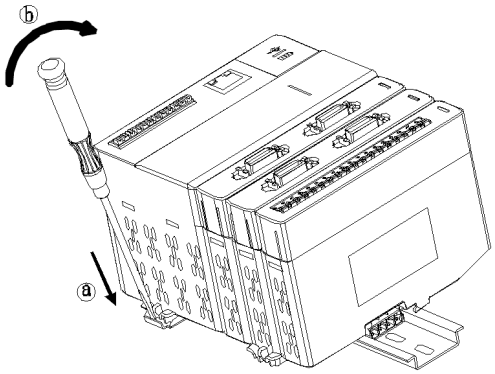	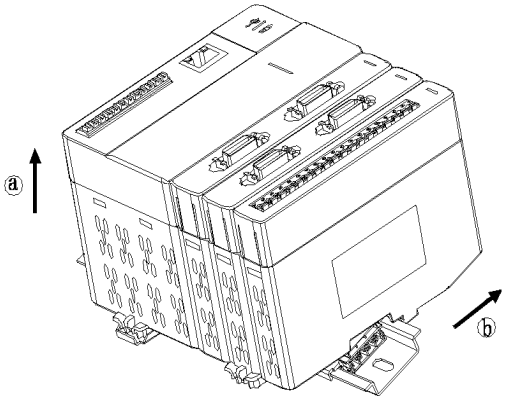
7.unit andDINThe guide rails are separated, and the disassembly is completed (Fig.aandb).	

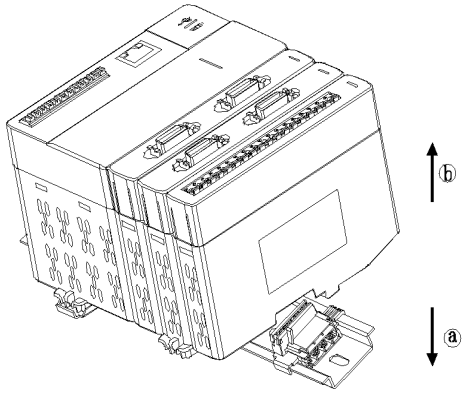 ⓑ ⓐ	

Chapter 5 Wiring

5.1.Wiring Recommendations

5.1.1.Ground the shielded cable

high speedI/O, analogI/O, Fieldbus, and communication signal cables must use shielded cables. Ground as close to the module as possible, so that the grounded cable will not be affected by the electromagnetic induction of the cable before grounding. For the shielded part of the shielded cable that is exposed after stripping part of the outer skin, try to make it grounded with the conductive backplane in a large area to ensure good contact.

For soldering the shielded part of the shielded cablePVCThe method of grounding the wire through its front end will increase the high frequency resistance and weaken the shielding effect. It should be noted and avoided as much as possible.

The analog signal is only grounded at one end near the module side, and the high-speedI/O, Field bus, communication signal cable shielded wire needs to be grounded at both ends.

5.1.2.Wiring Requirements

Low voltage cables (<1KV)Generally divided into four types, only the same type of cables can be put together to form a cable bundle, different types of cables should be separated when wiring, generally not overlapping, when crossing is unavoidable, it should be crossed at right angles. A certain distance is required between different types of cables. For cables with a length less than 30mFor cables, the minimum allowable spacing is shown in the figure below. When the length of the parallel wiring of the cable increases, the spacing should be appropriately increased. In addition to maintaining the spacing, multiple shielding plates can also be installed between different types of cables to achieve shielding. To reduce cross-interference, all cables should be routed as close as possible to the (earthed) structural member connected to the cabinet ground. For example, mounting panels for cabinets or rack parts.

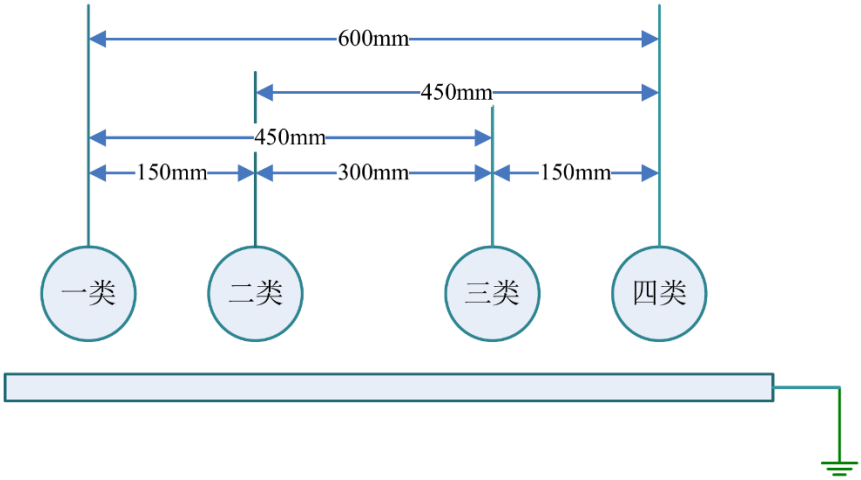

Schematic diagram of wiring requirements for various types of cables

【Note】One class: Ethernet,EtherCAT;

Class II: low-speed digital communication signals (RS232,RS485,CANetc.) and numbersI/OThree types of signals: low-voltage AC distribution lines (such asPLC 220VAC power cord) or DC power cord (such as switching power supply outputDC 24Power cord) four categories: input and output cables, welding machine cables, power converter power cables

5.2.Wiring of the power supply

5.2.1.General Considerations

-Choice of power supply

● Please use a power supply with low noise as much as possible.

● Although there is sufficient noise margin for noise superimposed on the power supply line, it is recommended to further reduce noise by using an isolation transformer/isolated power supply.

-Separation of power system

The wiring on the unit, input and output equipment, and power equipment should be separated from the system.

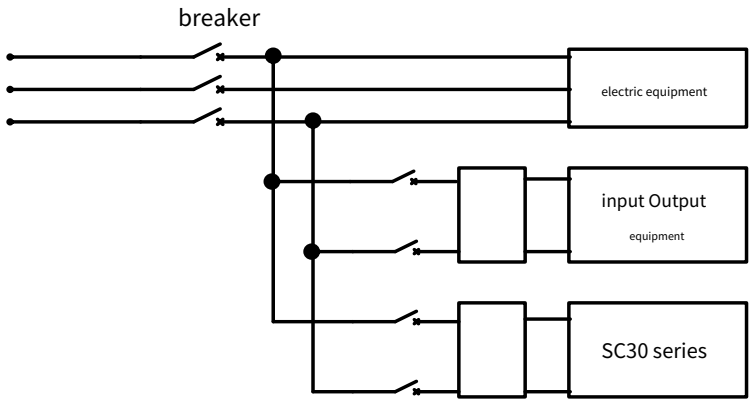

Insulation transformer

Insulated DC power supply

-Power sequence

● Please consider the power supply sequence, and cut off the power supply of the controller before cutting off the power supply for I/O.

● If the power for input and output is turned off before turning off the power to the controller,SC20The controller may detect changes in input levels and cause unexpected sequence actions.

5.2.2. SC20Controller power

-Wiring of the power supply

unit	Wiring diagram
SC20controller	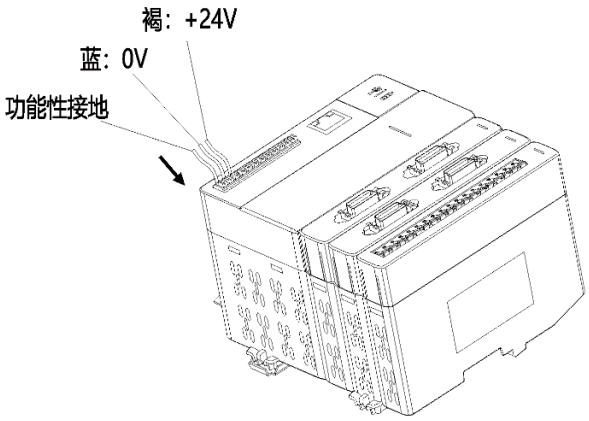

-About the choice of power supply

● To protect the circuit from the influence of abnormal voltage from the power supply line, use an isolated power supply with a built-in protection circuit in the power supply. (Reinforced insulation or double insulation power supply)

● Among the regulators built in the unit, a non-isolated type is used.

● Please select a power supply whose capacity exceeds the unit to be connected. Also, even at the minimum configuration, choose24Wabove power supply.

-voltage

● Make sure that the voltage of the power supply to be connected is within the allowable range.

Rated input voltage	allowable voltage range	Rated output capacity
24V DC	20.4V-28.8V DC	24Wabove

-power cable

● It is recommended to customize the color and label of the power supply cable.

brown:24V DC,blue:0V, green: functional ground wire

● To reduce the influence of noise, twist the power cable (twist processing).

5.2.3.ground

-Use dedicated ground

● Please use grounding resistance100ΩbelowDkind(3class) grounded.

● The grounding point should be as close as possibleSC20The controller shortens the distance of the ground wire.

● When the ground is shared with other equipment, the opposite effect may occur, so a dedicated ground must be used.

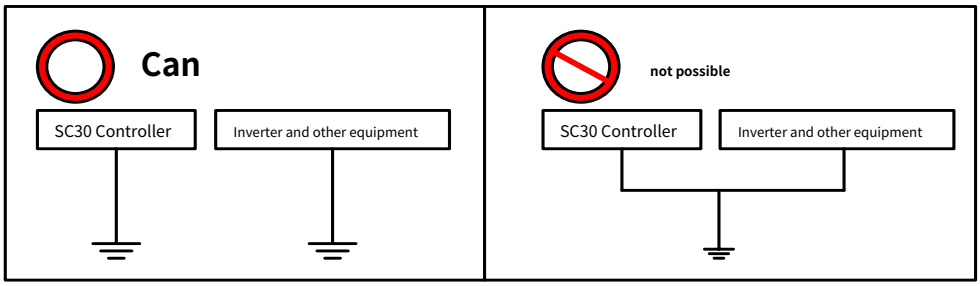

5.3.network wiring

Please use the network wiring5eShieldedLANcable. To prevent it from falling off, connect the connector on the cable side firmly to the network connector (RJ45connector).

The length between nodes should be100mWithin , the total length of the communication loop shall be200mwithin.

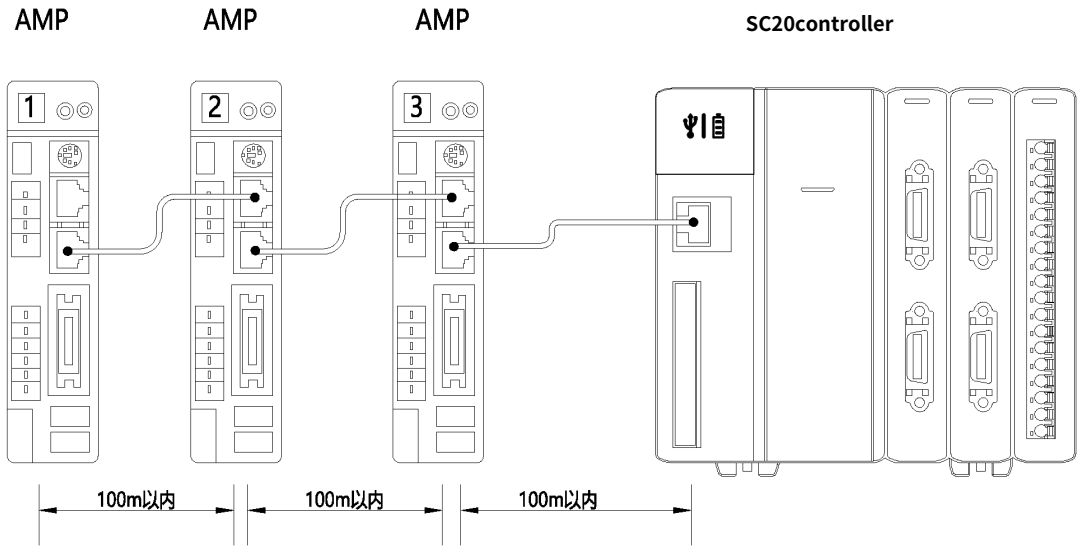

● connect toSC20controller'sEthernetofLANThe port is connected to the communication input port of the servo drive, and the communication output of the driveLANport is connected to the next servo drive, and so on. The communication connection adopts the chain connection.

5.4.General Wiring Specifications for I/O Modules

5.4.1.General Considerations for Input and Output

-Location of wiring

For input wiring and output wiring, and these wiring and power wiring should be as far away as possible. Do not route or bundle them in the same conduit. Input and output wiring, power lines, and high-voltage lines should be at least100mmabove.

-Choice of wires

When wiring the input line and output line, please select the diameter of the wire according to the current capacity.

-power supply

please turn offSC20After the power supply is connected, perform wiring.SC20The connection between the controller and the expansion unit should also be performed with the power off. Connecting while the power is on may cause malfunction or malfunction.

5.4.2.Input side wiring

-Connections with photoelectric sensors and proximity sensors

Relay output type

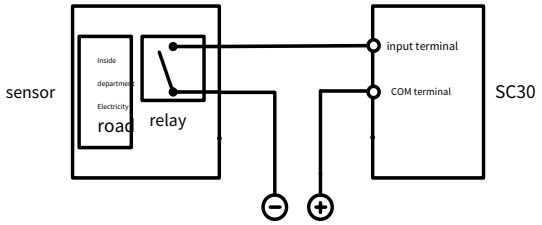

NPNOpen collector output type

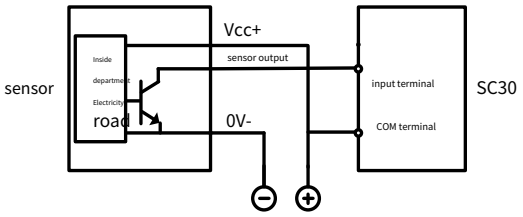

Voltage output type

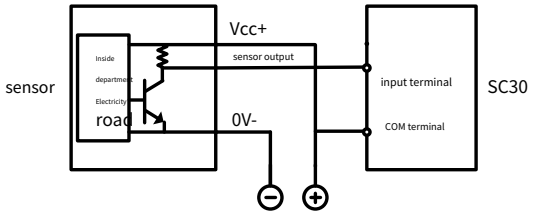

Two-wire output type

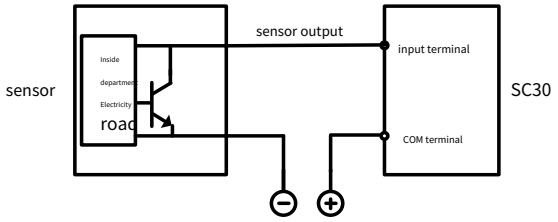

-use beltledPrecautions when using reed switches

whenledconnected in series to the input contacts (e.g. withledreed switch, etc.), pleaseSC20applied to the input terminals greater thanON voltage voltage. Be especially careful when connecting multiple switches in series.

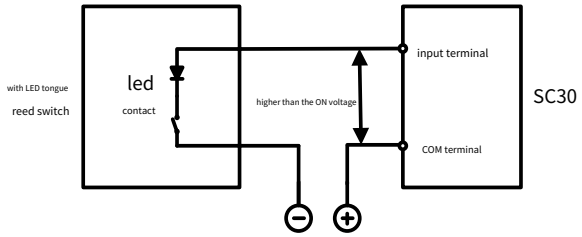

-Precautions when using a two-wire sensor

When using a two-wire photoelectric sensor or a proximity sensor, the flow cannot be interrupted due to the influence of leakage current.SC20input current, connect the bleeder resistor as shown below.

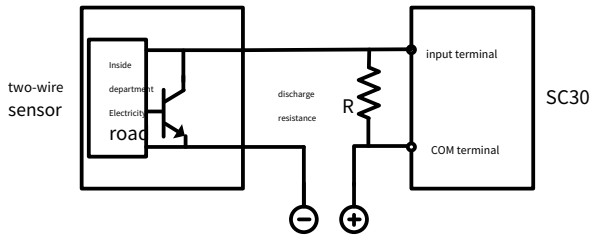

-use beltledPrecautions for limit switches

use beltledWhen the limit switch of theSC20input current, connect the bleeder resistor as shown below.

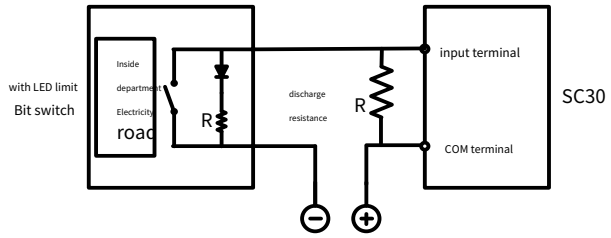

5.4.3.Axis-controlled high-speed counter input wiring

-Part1.Case of Line Driver for Encoder Input

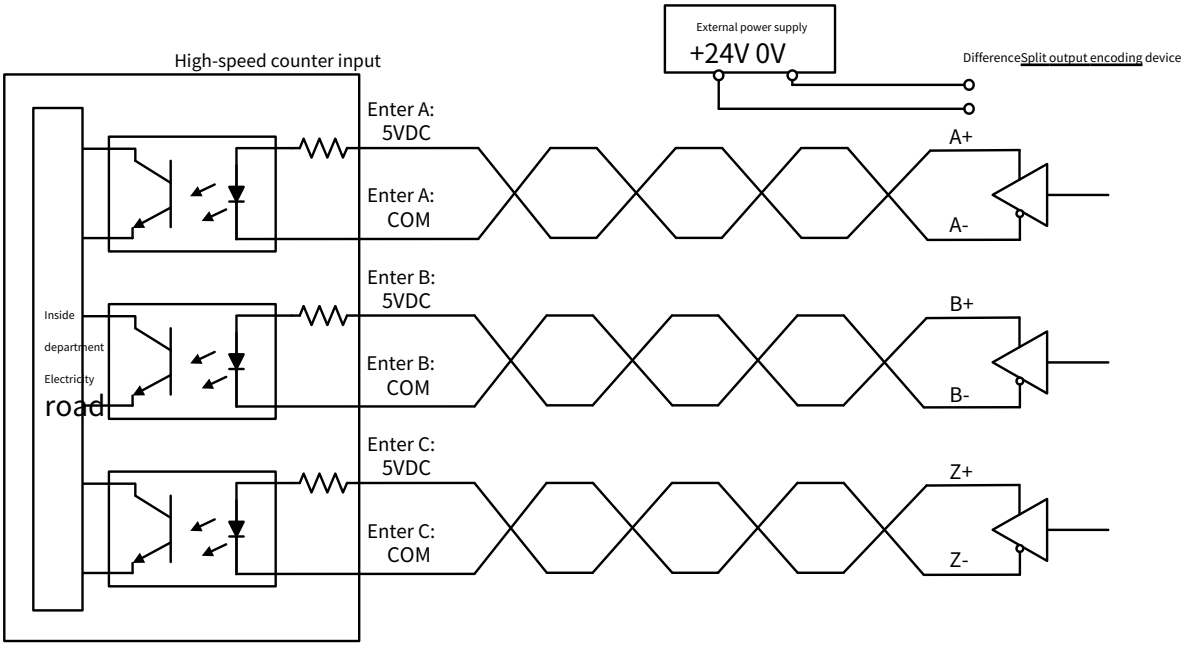

-Part1.Transistor and open collector type of encoder input

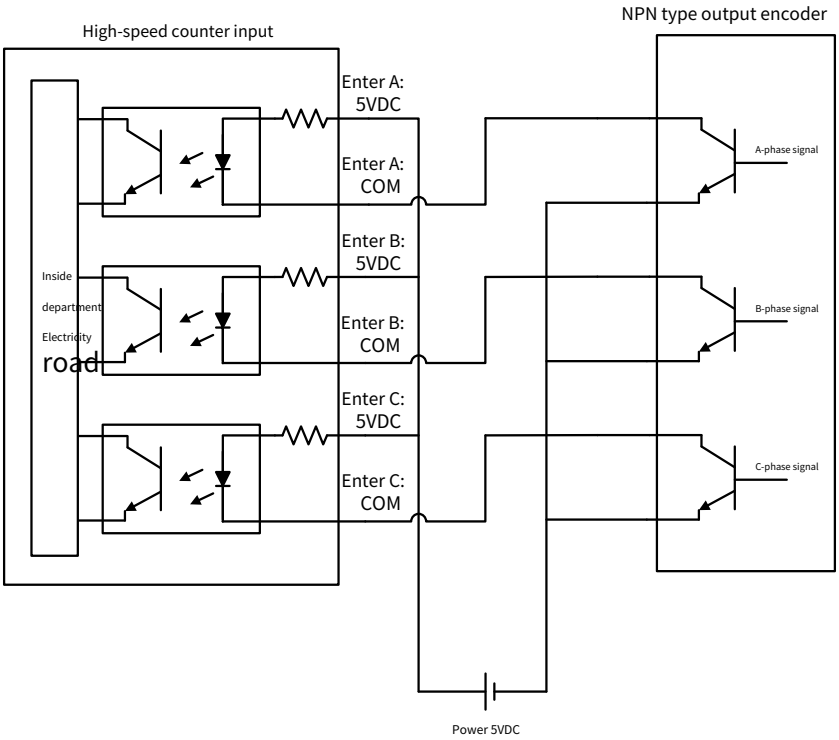

-Part1.In the case of sensor input

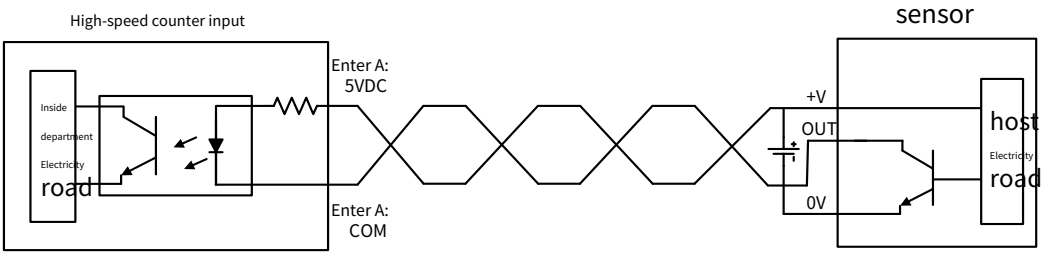

-Part2.High-speed pulse command output (differential output)

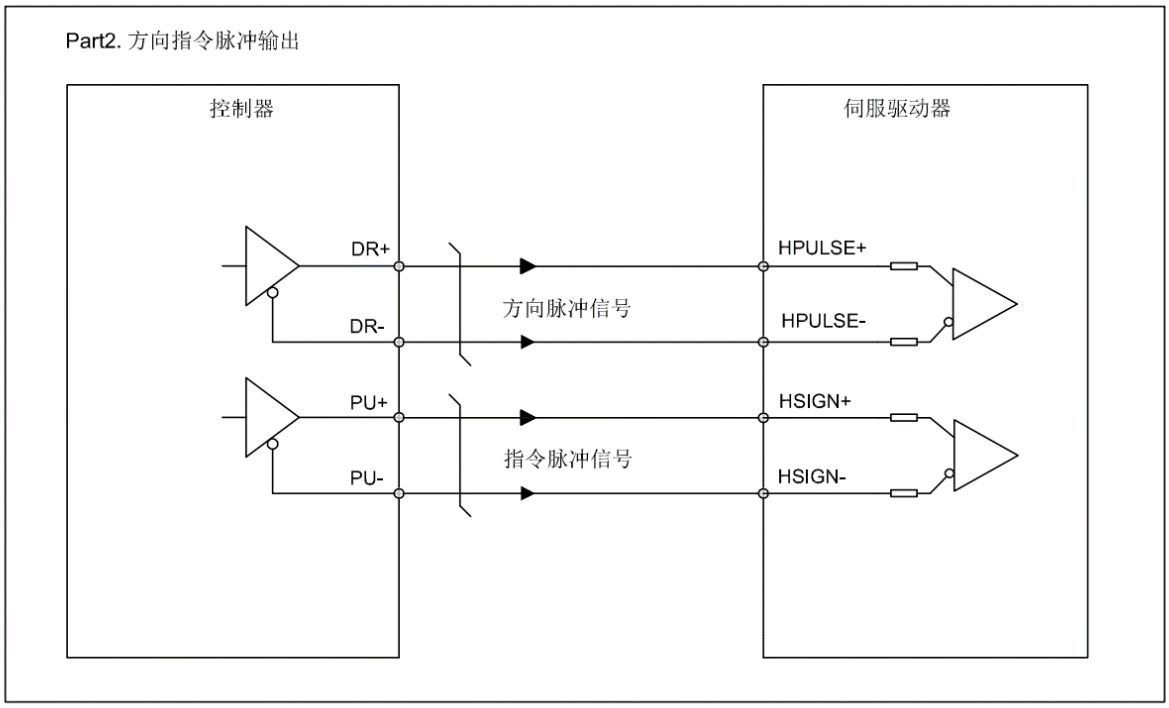

5.4.4.Wiring on the output side

-Protection circuit for inductive loads

For inductive loads, install a protection circuit in parallel with the load.

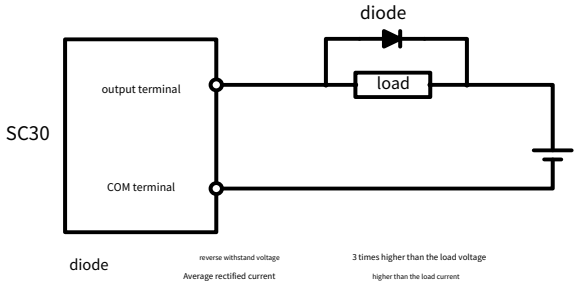

-Precautions when using capacitive loads

When connecting a load with a large inrush current, in order to minimize its influence, please set up the following protection circuit.

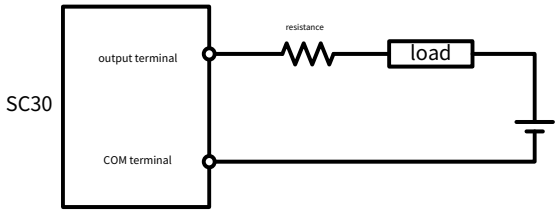

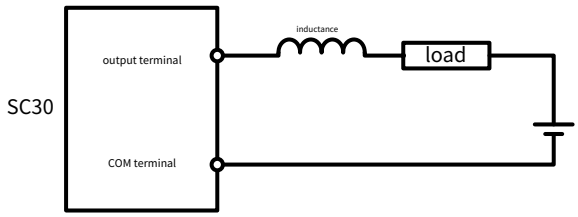

5.4.5. RS485Communication Termination Resistor Wiring

-Topology

RS485The bus connection topology is shown in the following figure,RS485It is recommended to use shielded twisted pair connection for the bus,485+,485-Twisted pair connection; only separate connections at both ends of the bus120ΩTermination resistors prevent signal reflections, terminating resistors are built into the controller485Inside terminals, no external connections required; all nodes485The reference grounds of the signals are connected together; at most128nodes, and the distance between the branches of each node is less than3M.

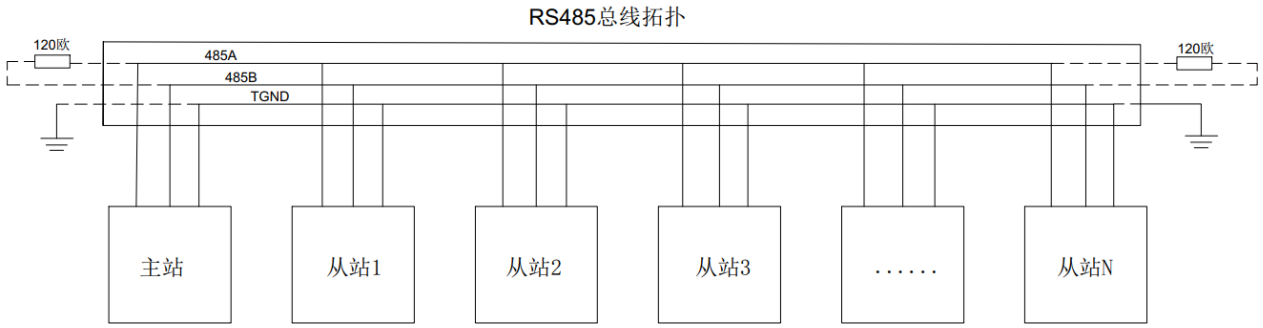

When the number of nodes is large,485The bus must be a daisy-chain connection. If branch line connection is required, the shorter the branch length between the bus and the node, the better, it is recommended not to exceed3m. Resolutely put an end to star connections.

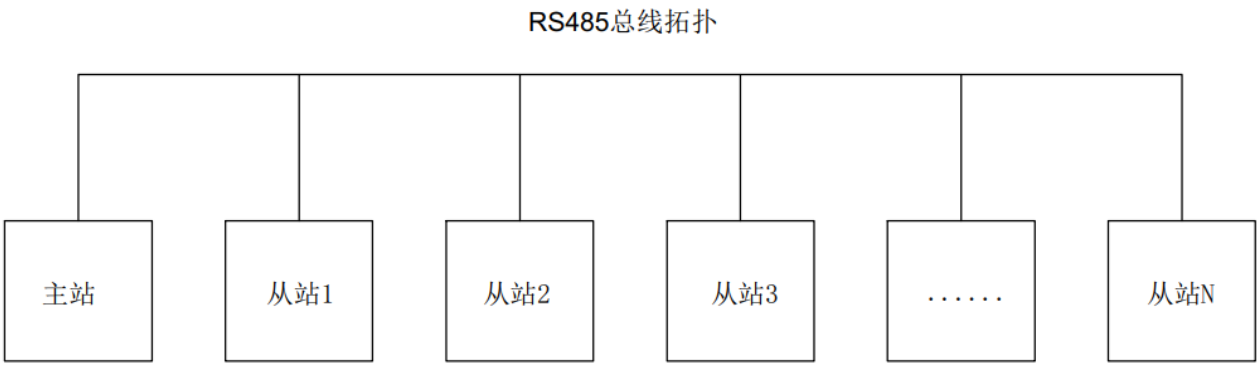

-Terminal wiring method

Please check the site485Does the bus contain and485A,485B,TGNDFor the three cables connected to the three terminals, make sure that the terminals are not reversed or wrongly connected. If a shielded cable is used, it is especially important to note that the shield must also be connected to theTGNDterminals, at any node or halfway position, except for theTGND, the shielding layer is prohibited from being connected to any other place (including the on-site chassis, equipment grounding terminals, etc. can not be connected). Due to the attenuation effect of the cable, it is recommended that the connection length be longer than3mcables are usedAGW26or thicker cables, always recommended 485Aand485BUse twisted pair cables for connecting cables. A terminating resistor at one end of the bus is built into the terminal, no additional external connections are required.

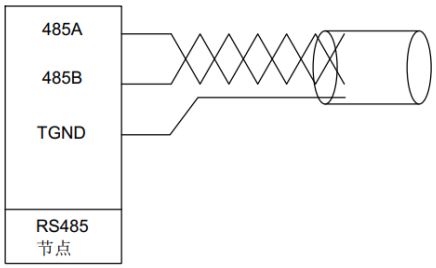

There areTGNDSchematic diagram of wiring terminal

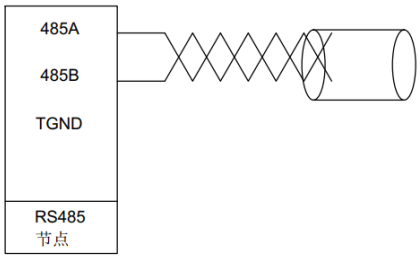

no on siteTGNDSchematic diagram of wiring terminal

5.4.6. CANCommunication Termination Resistor Wiring

-Topology

CANThe bus connection topology is shown below,CANIt is recommended to use shielded twisted pair connection for the bus, and two ends of the bus are respectively connected120Ω Termination resistors prevent signal reflections. The shielding layer generally uses a single-point reliable grounding.

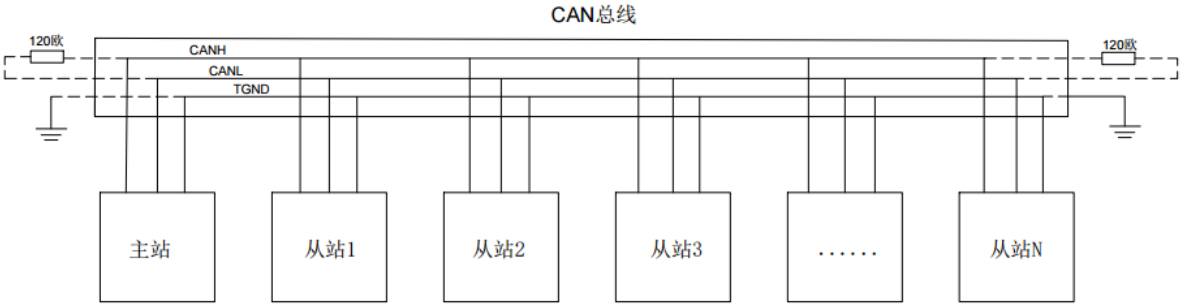

-Terminal wiring method

It is recommended to use shielded twisted pair connection, and two ends of the bus are respectively connected120ΩThe terminal matching resistance prevents signal reflection. Generally, the shielding layer is grounded reliably at a single point. When fixing cables, do not bundle them with AC power cables and high-voltage cables to avoid the influence of interference on communication signals. A terminating resistor at one end of the bus is built into the terminal, no additional external connections are required.

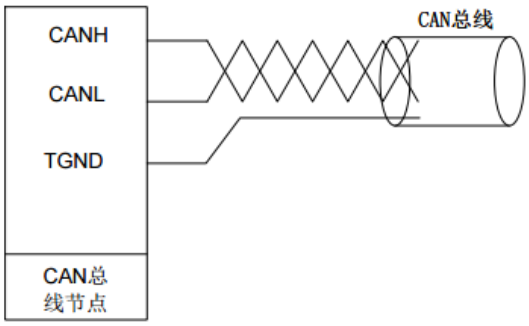

Schematic diagram of wiring terminal

5.4.7. DIInput wiring instructions

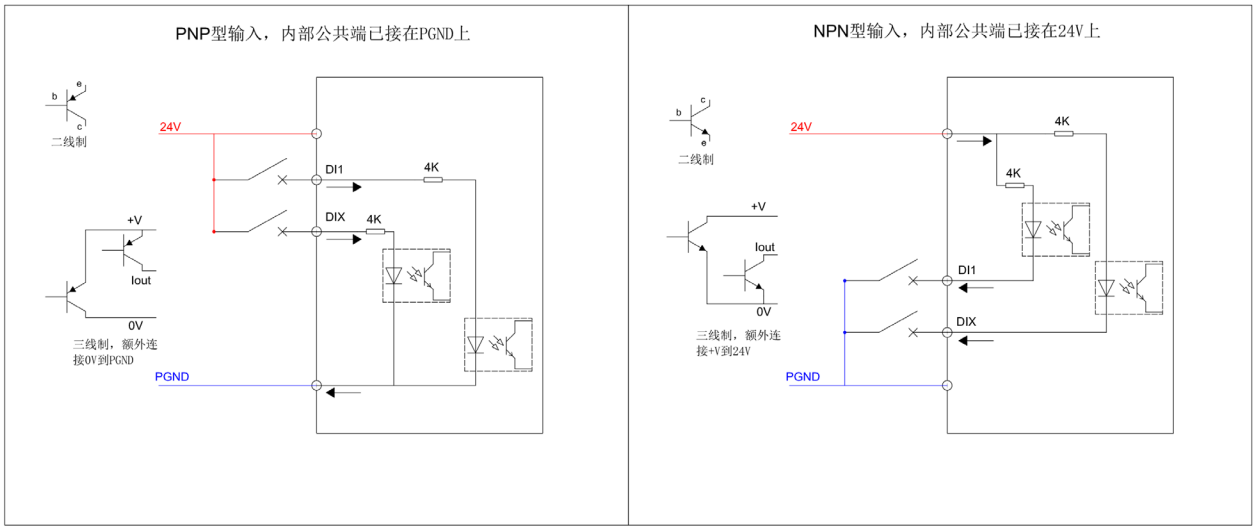

Knowledge points:

1.To determine which type of input is supported, you only need to determine that the common terminal of the external device is connected to24V(PNPtype) or0V(NPNtype). some Two types are supported, the common terminal of the internal circuit is not directly connected to the power terminal, but provides aCOMport for user-defined connection to 24Vstill0V, so that the common terminal of the external device can also change the connection. Of course, the internal optocoupler must be bidirectional at this time.

2.Sink input correspondencePNPtype input; source type input corresponds toNPNtype input.

PNPType input wiring, external device common termination24V, signal output terminalDIX. Three-wire system will signal output terminalIoutcatchDIX, +V and0V terminated to24Vboth ends of the power supply, namely24VandPGND.

NPNType input wiring, common termination for external devicesPGND, signal output terminalDIX, the three-wire system will signal outputIoutcatchDIX, the remaining two wires are connected to both ends of the power supply.

5.5.Module terminal signal arrangement and cable production

5.5.1.cable production

In addition to the shaft control high-speed counter board adoptsDB20Connector (to be customized) andLANoral useRJ45(8P8C) plug, otherI/OTerminal wiring is usedPUSH ININ-line wiring, no need for custom cluster sockets.

-Connection cable diameter specification

project	Reference data
Power wiring (2)	0.5-1.5
I/O module (2)	0.2-1.5
In-line cable stripping length (mm)	8-9

	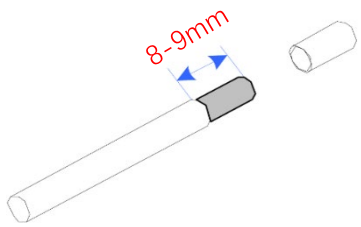 Stripping Diagram

5.5.2.Serial port and power interface terminal signal arrangement and definition

Schematic diagram of terminal arrangement	No.	name	Function
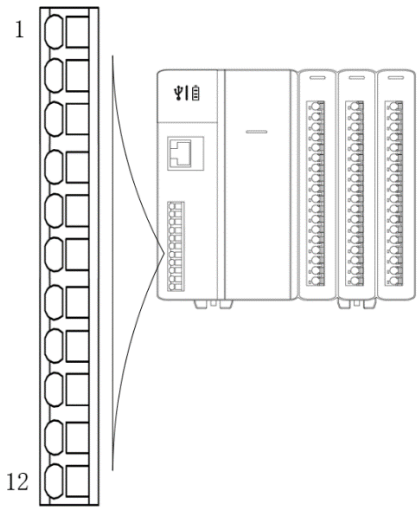	1	485A	RS485Communication+
	2	485B	RS485communication-
	3	TGND	Power reference ground
	4	RX	RS232take over
	5	TX	RS232send
	6	TGND	Power reference ground
	7	CANH	CAN+
	8	CANL	CAN-
	9	TGND	Power reference ground
	10	24V	Power input 24V
	11	GND	power input ground
	12	PE	the earth

Wiring Reference:

RS485Communication field wiring and terminating resistor wiring

CANCommunication field wiring and terminating resistor wiring

5.5.3.Signal arrangement and definition of analog-digital mixed input and output board terminals

Schematic diagram of terminal arrangement	No.	name	Function
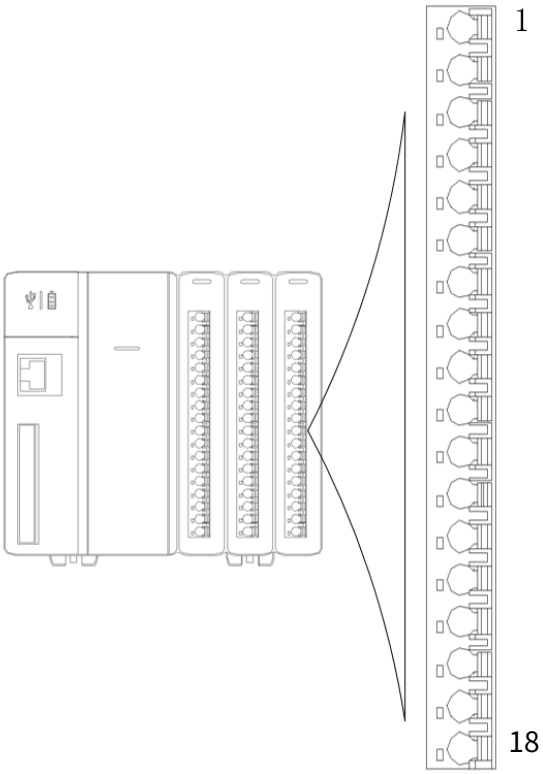	1	AI1	Analog input 1
	2	AI2	Analog input 2
	3	AGND	Analogously
	4	DI1	digital input
	5	DI2	digital input
	6	DI3	digital input
	7	DI4	digital input
	8	HDI5	High-speed digital input
	9	HDI6	High-speed digital input
	10	HDI7	High-speed digital input
	11	HDI8	High-speed digital input
	12	COM+	public
	13	DO1	digital output
	14	DO2	digital output
	15	DO3	digital output
	16	DO4	digital output
	17	24V	Supplemental power input
	18	PGND	Supplementary power ground

-Peripheral Wiring and Module Internal Circuit

SC20Controller body moduleSLOT3support2roadAIshare a common terminal,0-10Vvoltage input;8roadDIonly supportedNPNtype input, where4road expresswayDI,support10KHz.4roadDOforNPNtype input.NPNtype andPNPtype input wiring, please refer toDIInput wiring instructions .

For the peripheral wiring part of the module, please connect as follows:

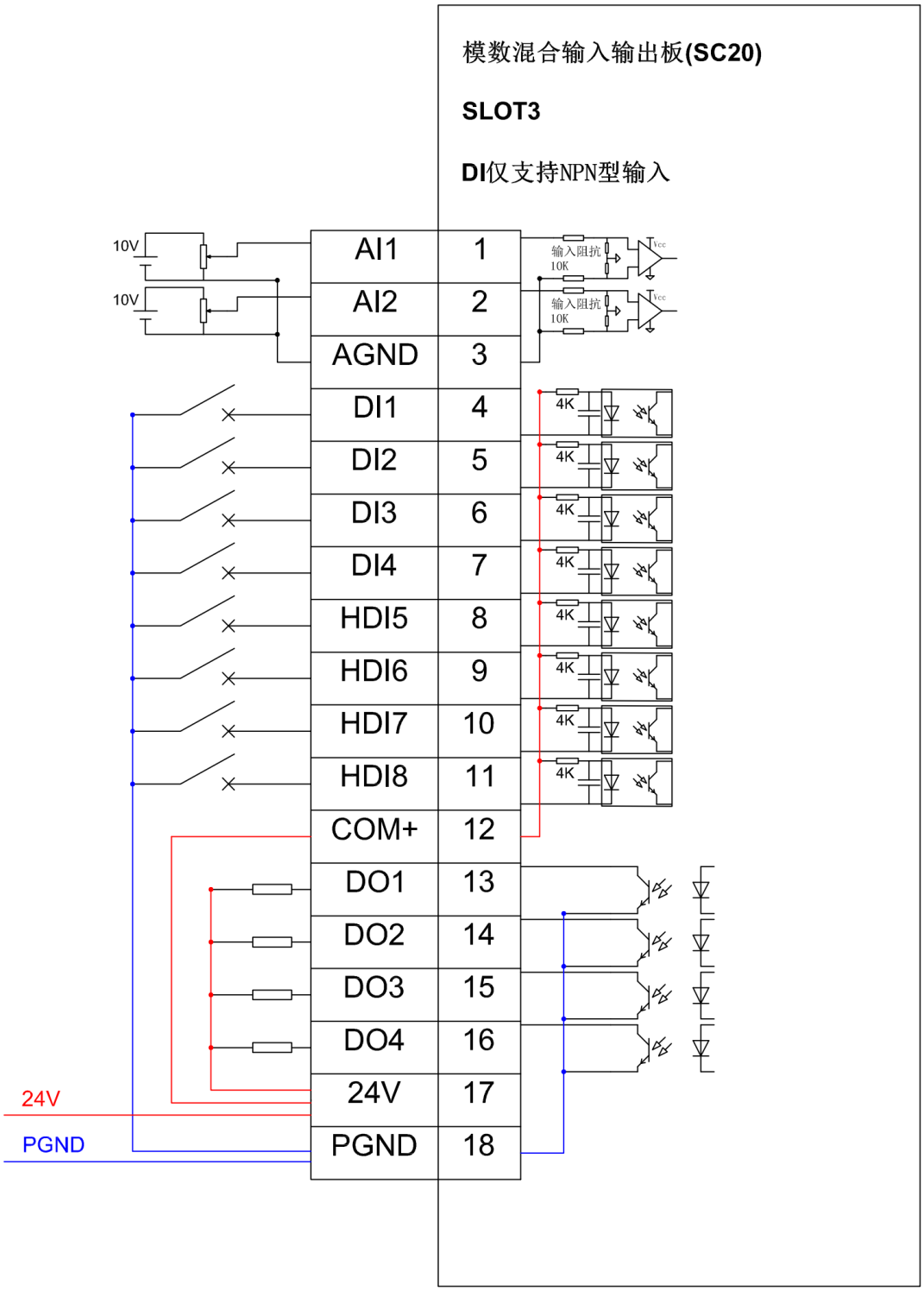

5.5.4.Local optional common input and output board terminal signal arrangement and definition

Schematic diagram of terminal arrangement	No.	name	Function	Remark
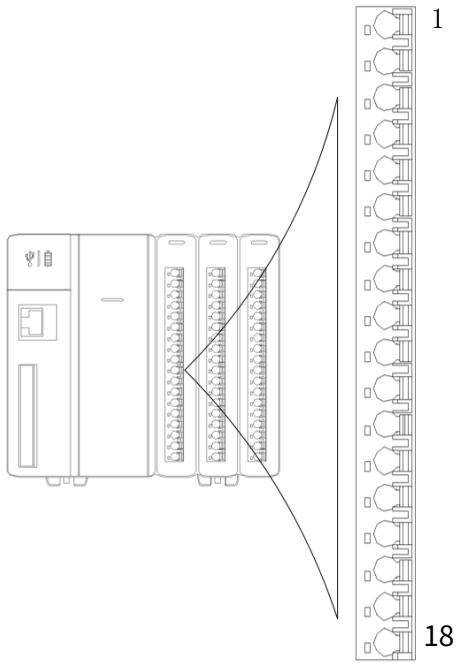	1	DI1	digital input	Sink input, active low
	2	DI2	digital input	Sink input, active low
	3	DI3	digital input	Sink input, active low
	4	DI4	digital input	Sink input, active low
	5	DI5	digital input	Sink input, active low
	6	DI6	digital input	Sink input, active low
	7	DI7	digital input	Sink input, active low
	8	DI8	digital input	Sink input, active low
	9	DI9	digital input	Sink input, active low
	10	DI10	digital input	Sink input, active low
	11	DI11	digital input	Sink input, active low
	12	DI12	digital input	Sink input, active low
	13	DO1	digital output	Source output, active low
	14	DO2	digital output	Source output, active low
	15	DO3	digital output	Source output, active low
	16	DO4	digital output	Source output, active low
	17	24V	Supplemental power input	— —
	18	PGND	Supplementary power ground	— —

-Peripheral wiring and module internal circuit

moduleX12Y4only supportedNPNtype input. Three-wire or two-wire? as well asNPNtype andPNPtype? Please refer toDIInput wiring instructions . For the specific wiring of the module, please connect as follows:

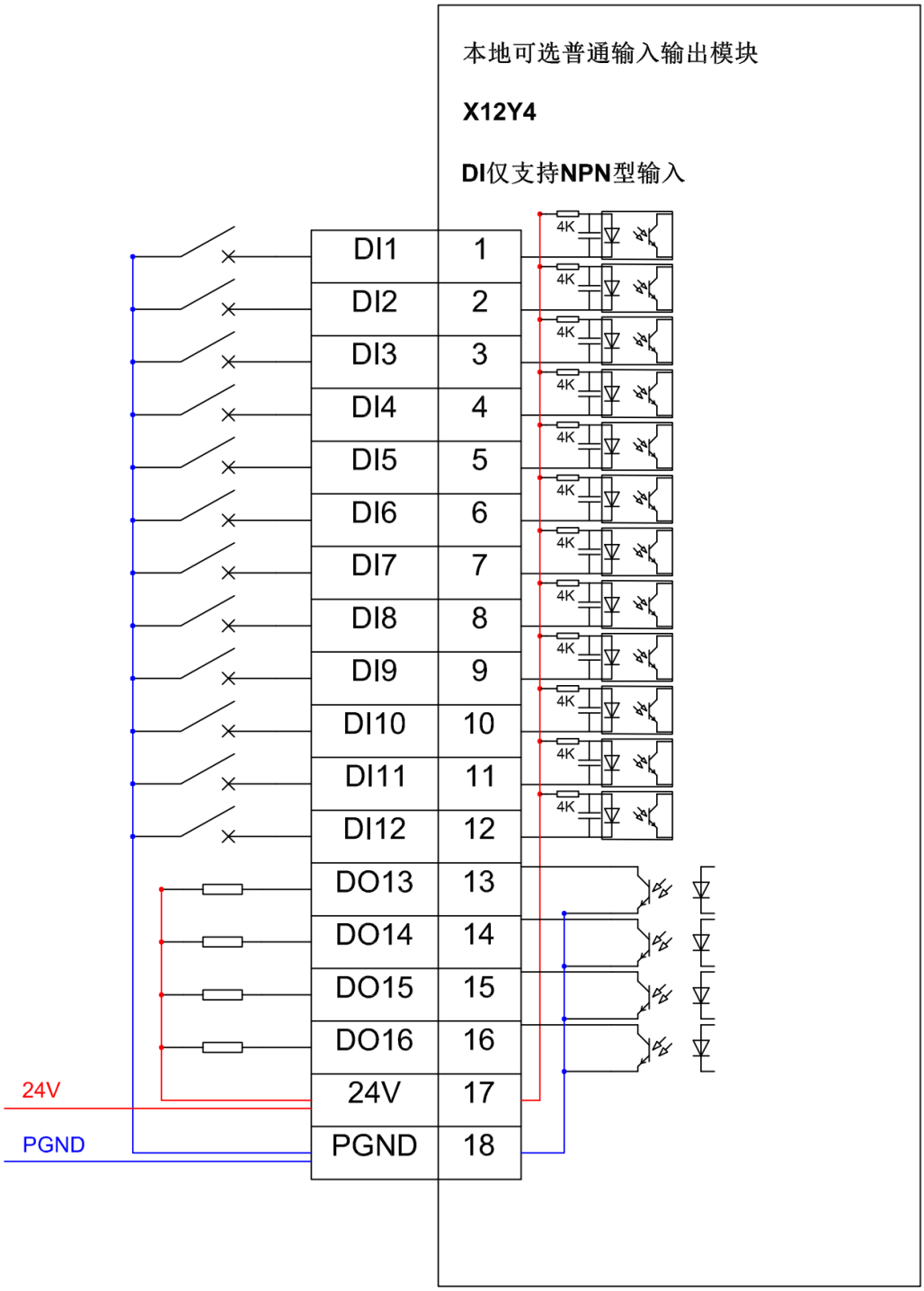

5.5.5.Local optional axis control high-speed counter board terminal signal arrangement and definition

Schematic diagram of terminal arrangement	NO.		name	use
	A_	B_		
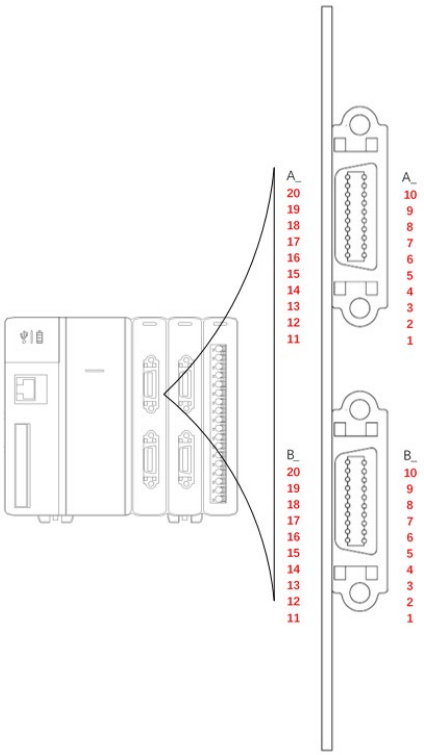	1	1	ECA1+	EncoderA
	2	2	ECA1-	EncoderA
	3	3	ECB1+	EncoderB
	4	4	ECB1-	EncoderB
	5	5	ECZ1+	EncoderZ
	6	6	ECZ1-	EncoderZ
	7	7	OPC	reserved high speedDI+
	8	8	PULS	reserved high speedDI-
	9	9	SRV_COIN	Servo positioning completedDI
	10	10	ALARM	Servo alarmDI
	11	11	+5V_ENC	Encoder power
	12	12	EGND	Encoder reference ground
	13	13	DR+	command direction
	14	14	DR-	command direction
	15	15	PU+	command pulse
	16	16	PU-	command pulse
	17	17	24V	Power Output
	18	18	GND_24V	reference place
	19	19	SRV_ON	enable servoDO
	20	20	CLEAR	Clear Servo AlarmDO

The axis-controlled high-speed counter module adoptsDB20The plug, the plug pins should be customized according to the "local optional axis control high-speed counter board terminal signal arrangement and definition".

DB20Connector Description

project	model
DB20male head 	SM-SCSI-20P

- **Peripheral wiring and module internal circuit**

Terminal internal division3part wiring, whichPart1andPart2Please refer to the detailed wiring below, the last part is the servo system signal, please refer to the signal functionLocal optional axis control high-speed counter board terminal signal arrangement and definition .

Servo signalDIenter:SRV_COIN(Servo positioning completedDI),ALARM(Servo alarmDI) only supportsNPNtype input.

Servo signalDOoutput:SRV_ON(enable the servoDO),CLEAR(Clear Servo AlarmDO)YesNPNtype output.

keep one of themOPCandPULSA group of high-speedDIInput, for user customization, wiring supportNPNtype andPNPType input, the following is only for drawingNPNtype input.NPNtype andPNPPlease refer to:DIInput wiring instructions .

Part1.Encoder: see,Axis-controlled high-speed counter input wiring .

Part2.Direction command pulse output: the signal is5Vsignal, do not connect24Vsystem. See:Axis-controlled high-speed counter input wiring . Note:inside the terminal5Vand24VIf the system coexists, pay attention to the terminal serial number to prevent24Vaccess5Vsystem with serious consequences.

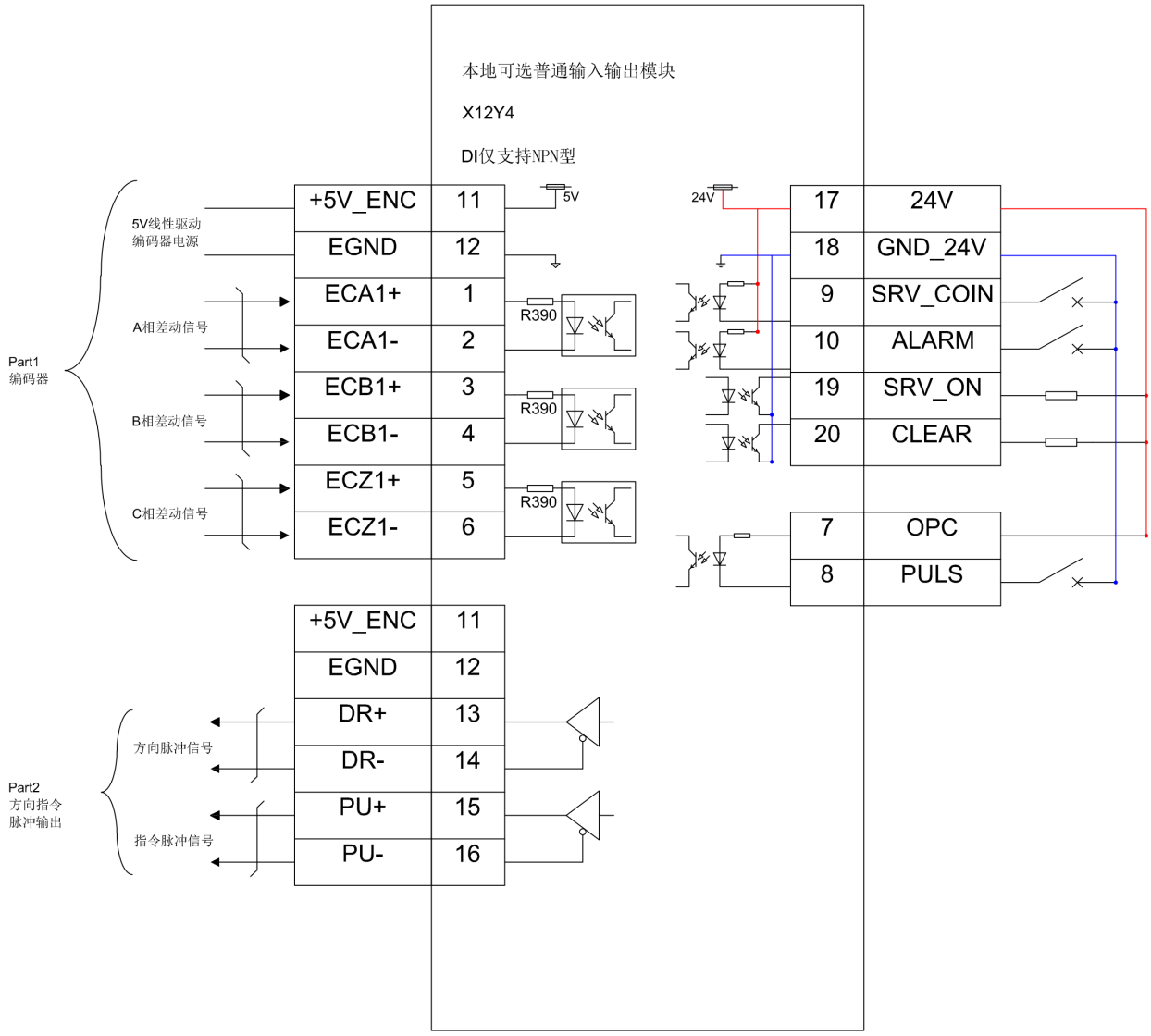

5.5.6.Local expansion digital input board terminal signal arrangement and definition

Schematic diagram of terminal arrangement	No.	name	Function	Remark
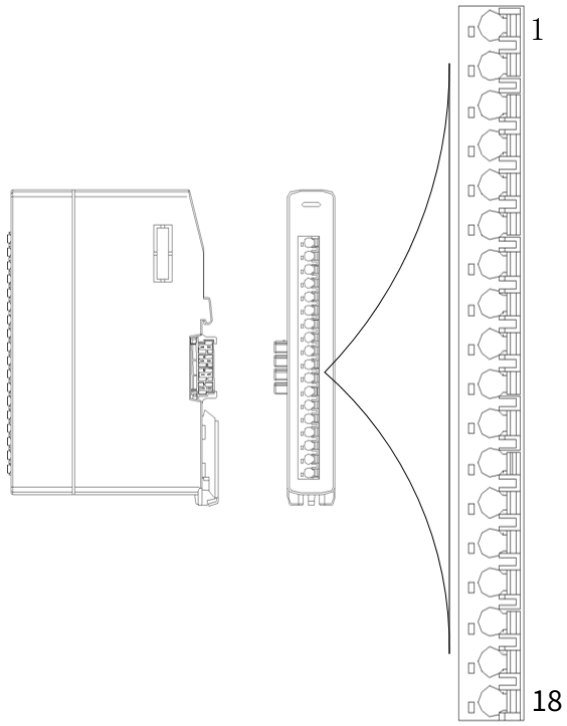	1	DI1	digital input	Sink input, active low
	2	DI2	digital input	Sink input, active low
	3	DI3	digital input	Sink input, active low
	4	DI4	digital input	Sink input, active low
	5	DI5	digital input	Sink input, active low
	6	DI6	digital input	Sink input, active low
	7	DI7	digital input	Sink input, active low
	8	DI8	digital input	Sink input, active low
	9	DI9	digital input	Sink input, active low
	10	DI10	digital input	Sink input, active low
	11	DI11	digital input	Sink input, active low
	12	DI12	digital input	Sink input, active low
	13	DI13	digital input	Sink input, active low
	14	DI14	digital input	Sink input, active low
	15	DI15	digital input	Sink input, active low
	16	DI16	digital input	Sink input, active low
	17	COM+	public	— —
	18	NC	empty pin	— —

- **Peripheral wiring and module internal circuit**

moduleX16ofDIinput type supportPNPtype input andNPNtype input, but when usingNote: so the input needs to be of a type, each input internal common is connected atCOM+,So it can't be used at the same timePNPtype input andNPNType inputs must all be of one type. twoDIInput type specific referenceDIInput wiring instructions !

Note:All input types must be one type! ! ! **NPNtype input**

(source type signal input), please connect as follows:

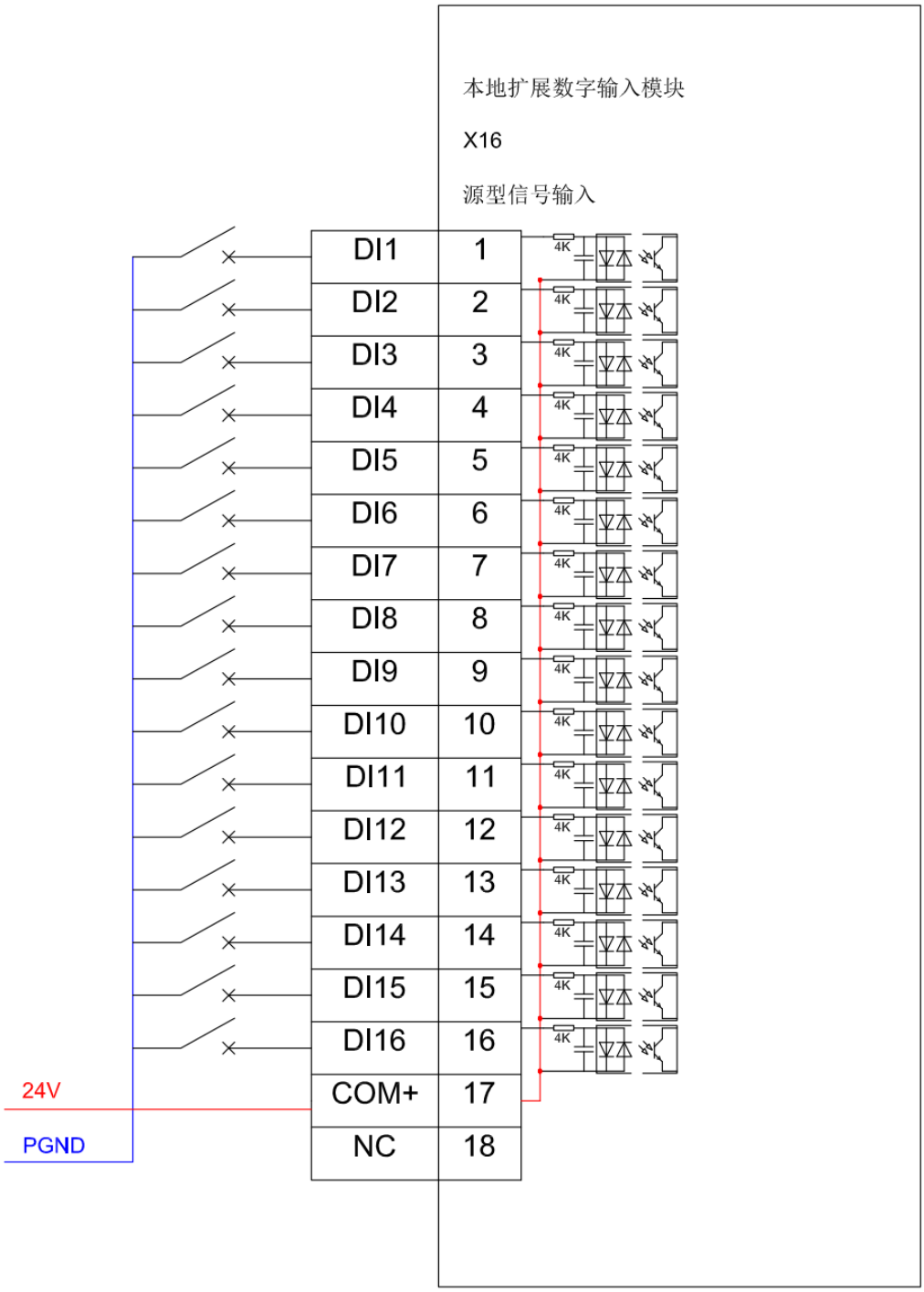

PNPtype input (sink type signal input), please connect as follows:

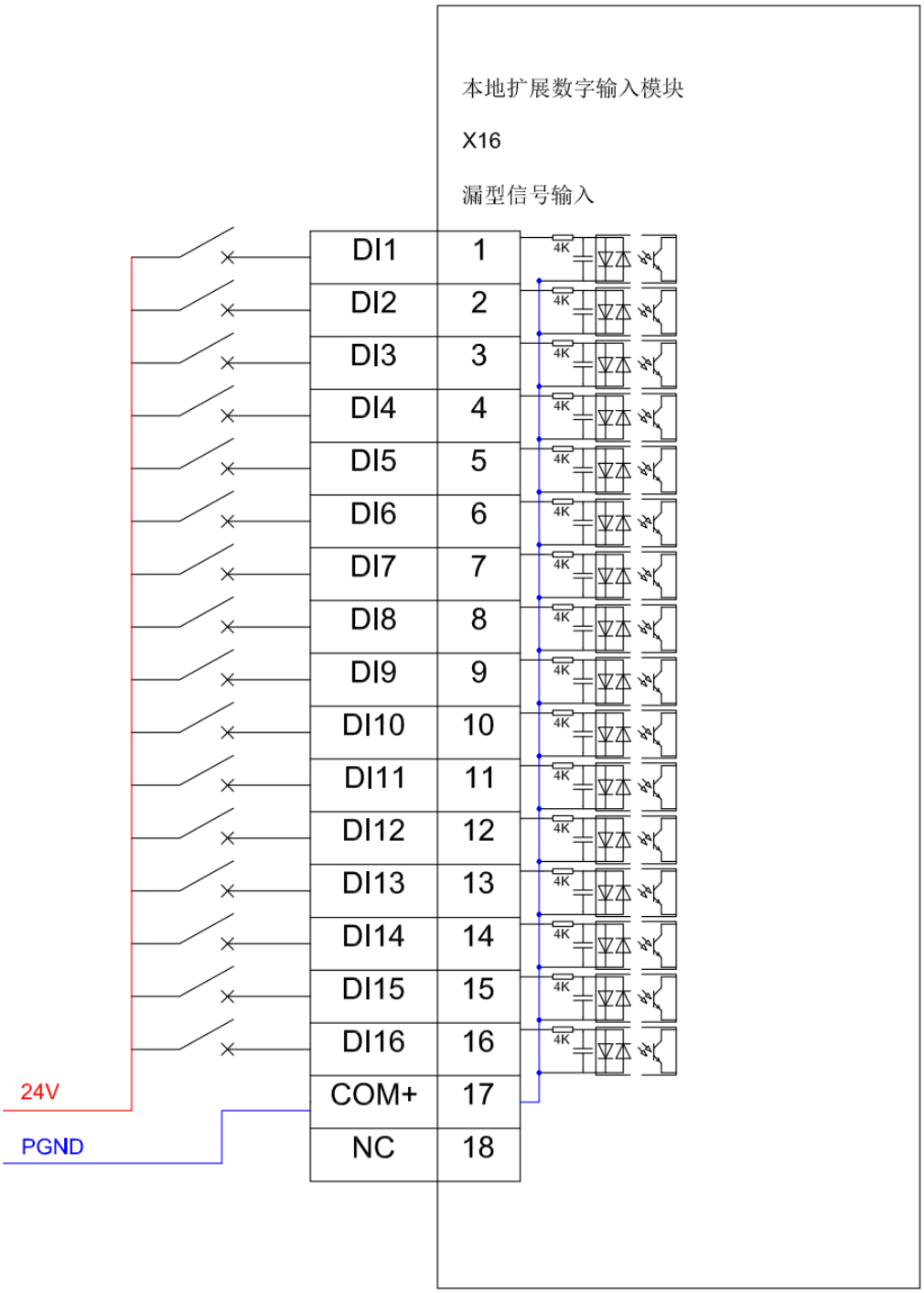

5.5.7.Local extension digital output terminal signal arrangement and definition

Schematic diagram of terminal arrangement	No.	name	Function	Remark
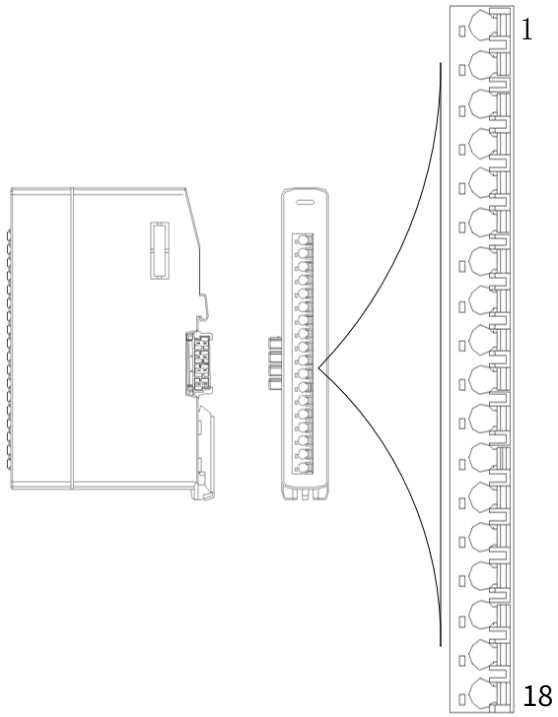	1	DO1	digital output	Source output, active low
	2	DO2	digital output	Source output, active low
	3	DO3	digital output	Source output, active low
	4	DO4	digital output	Source output, active low
	5	DO5	digital output	Source output, active low
	6	DO6	digital output	Source output, active low
	7	DO7	digital output	Source output, active low
	8	DO8	digital output	Source output, active low
	9	DO9	digital output	Source output, active low
	10	DO10	digital output	Source output, active low
	11	DO11	digital output	Source output, active low
	12	DO12	digital output	Source output, active low
	13	DO13	digital output	Source output, active low
	14	DO14	digital output	Source output, active low
	15	DO15	digital output	Source output, active low
	16	DO16	digital output	Source output, active low
	17	24V	IOSupplementary power	— —
	18	PGND	IOreference place	— —

- **Peripheral wiring and module internal circuit**

moduleY16ofDOThe input type is source output (NPNtype output). **DOWhen it is a general load, please connect as follows:**

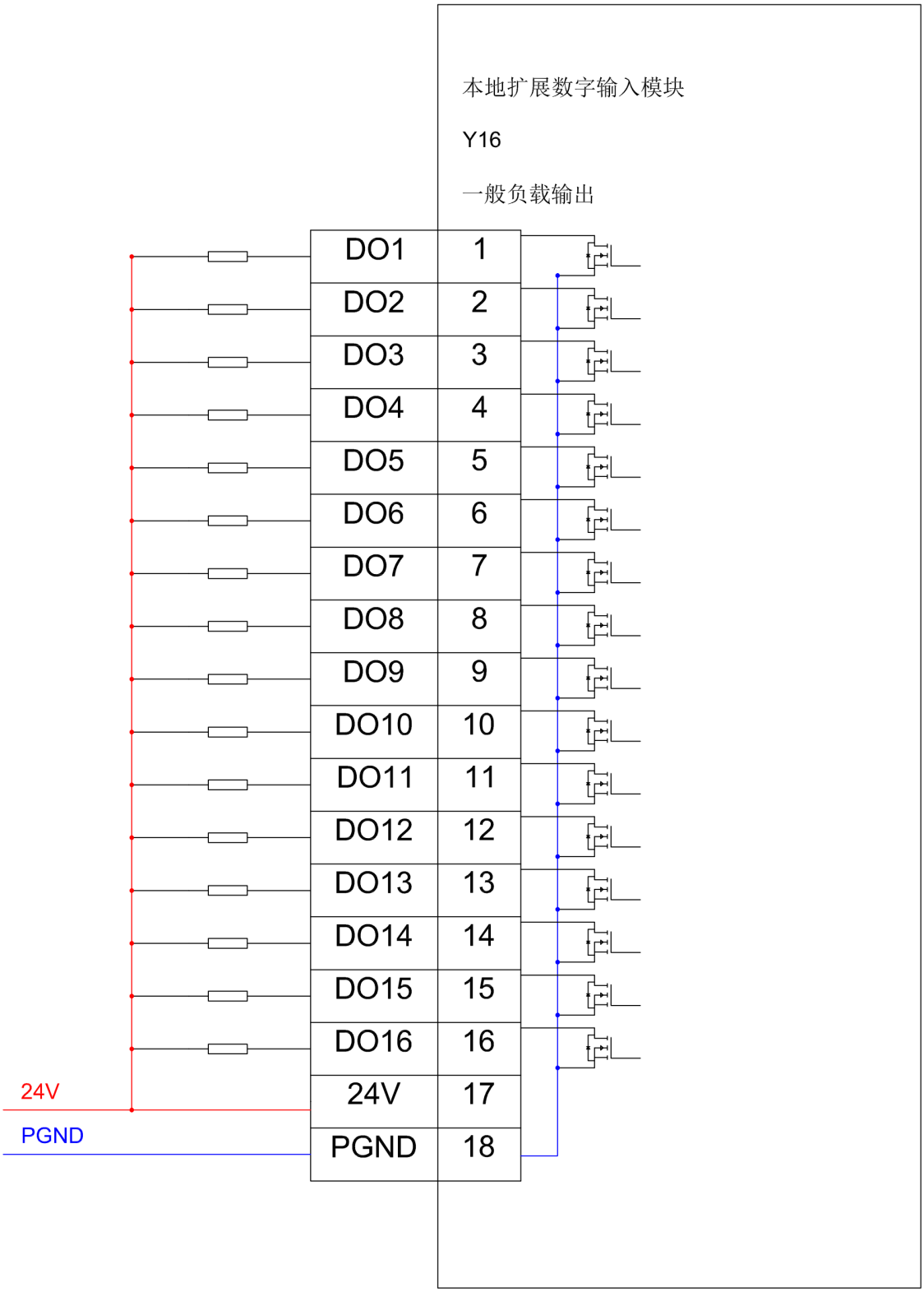

5.5.8.Local expansion analog input and output board terminal signal arrangement and definition

Schematic diagram of terminal arrangement	No.	name	Function
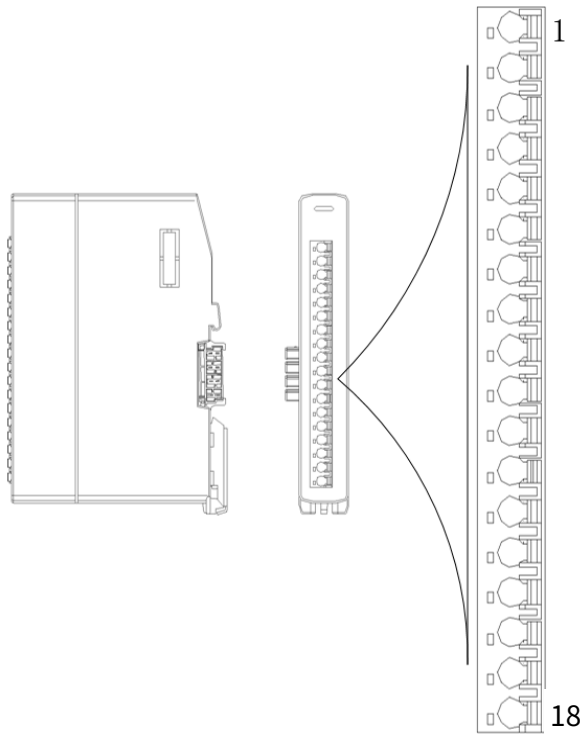	1	AI1+	Positive analog input
	2	AI1-	Analog input negative
	3	AI2+	Positive analog input
	4	AI2-	Analog input negative
	5	AI3+	Positive analog input
	6	AI3-	Analog input negative
	7	AI4+	Positive analog input
	8	AI4-	Analog input negative
	9	AGND	Analogously
	10	AO1+	Positive analog output
	11	AO1-	Analog output negative
	12	AO2+	Positive analog output
	13	AO2-	Analog output negative
	14	AGND	Analogously
	15	NC	empty pin
	16	NC	empty pin
	17	24V	IOSupplementary power
	18	PGND	IOreference place
Note: This analog module, throughPin17andPin18conduct24VDCPower, provide part of the power! ! !			

-Peripheral wiring and module internal circuit

AIInput valid voltage range0V-10V. The input impedance is10K.AOOutput effective voltage range0V-10V. CurrentlyAIOnly voltage input is supported. **module AX4Y2For peripheral wiring, please connect as follows:**

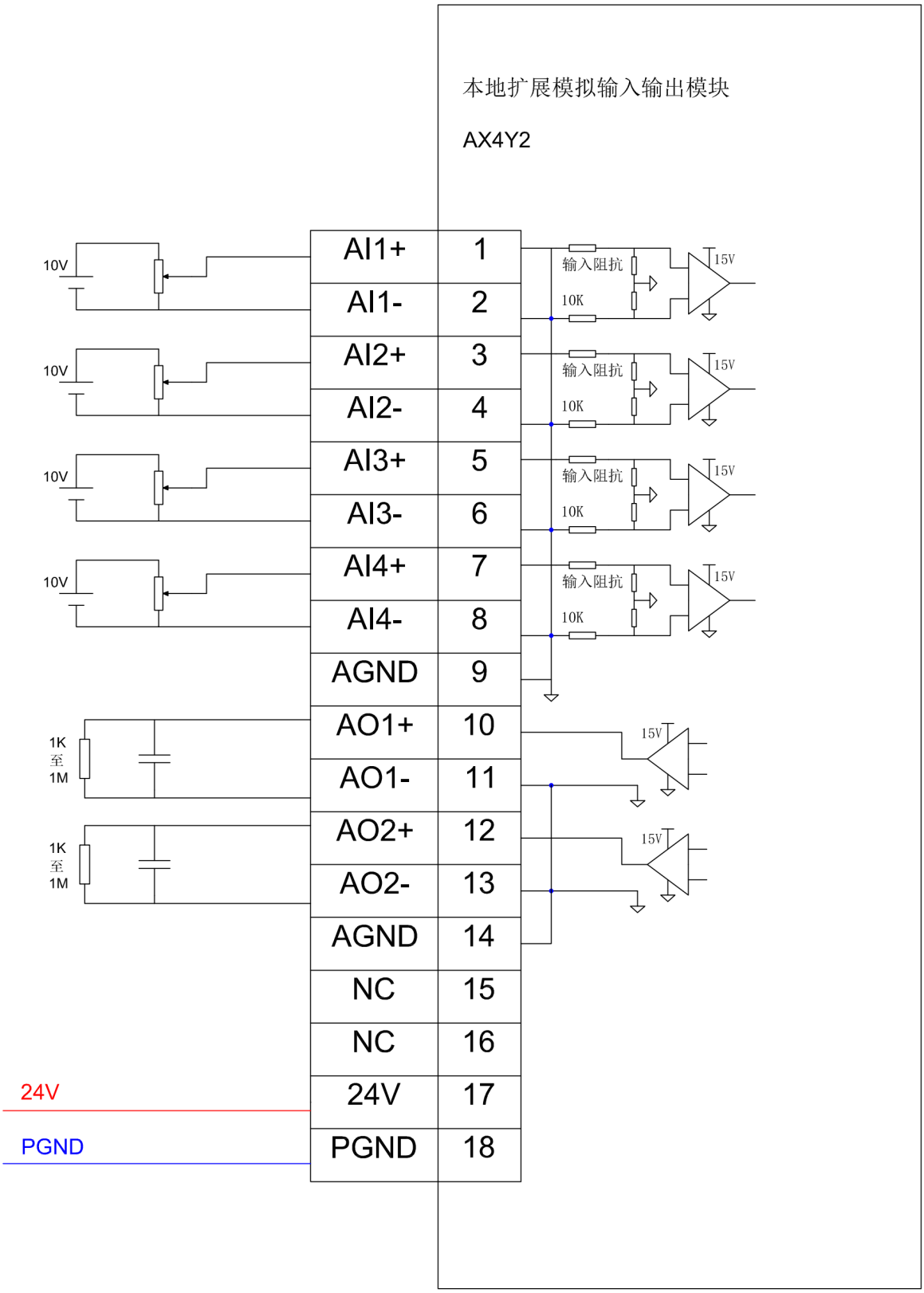

5.6.safety measures

5.6.1.safety measures

-System Design Considerations

● in useSC20In the system of , there may be malfunctions due to the following reasons. SC20The deviation of the starting and stopping time of the power supply, input and output equipment, and power equipment. Deviation in response time caused by momentary power failure.

SC20Abnormalities of the host, external power supply, and other devices.

Please take safety measures in order to prevent an abnormality or accident of the entire system caused by such a malfunction.

-Interlock Circuit Settings

● When controlling the reverse motion of the motor such as forward rotation and reverse rotation, pleaseSC20The external setting interlock circuit.

-Emergency stop circuit settings

● Install the circuit that cuts off the power supply of the output device in an emergency.SC20the exterior.

-Power sequence

● After the input and output equipment and power equipment are started, restartSC20.

● stopSC20If you do not know the relationship between the program and the device, please stop it first.SC20After the operation, stop the input and output equipment and power equipment.

● Due to the power-off hold circuit, after power-off30sPower on again to ensure the system hardware reset.

-ground

● Install near equipment that generates high voltage due to switching operations of inverters, etc. SC20When grounding, avoid common grounding, please use grounding resistance 100Ωthe following(Dclass ground/3Class grounding) dedicated grounding.

5.6.2.Instantaneous power failure

-Operation during momentary power failure

● If the momentary power failure time is not enough10ms, SC20will continue. if more than10ms,The operation will vary depending on the combination of units, power supply voltage, and other conditions. The same action as a power reset may occur.

Chapter 6 Confirm Wiring

6.1.Recommendations for safety circuits

This equipment requires the construction of the necessary safety circuits

E.g:

1. Motor forward and reverse interlock circuit is required when driven by servo

2. And the over-limit switch circuit of the motor

3. Emergency cut off the power circuit of the output device

6.2.Items to check when wiring

- Confirm the connection of each device

Please confirm that each device is connected as designed.

- Confirm external safety circuit settings

Please confirm that the wiring and installation of the safety circuit overrun switch based on the external circuit is properly installed.

- Confirm Power-On Sequence Settings

Please confirm that the power on step is set to press "PowerONoperation" to proceed.

- confirmSC20controller'sledStatus shows normal

Please observe after turning on the powerSC20controllerledstatus and checkledStatus display description. Judge whether the operation is normal, if there is any abnormality, please refer to the fault diagnosis for wiring fault troubleshooting.

6.3.power supplyON/OFFoperate

6.3.1.power supplyONoperate

- Turn on power to other load devices.
- turn onSC20Power supply for the controller.

6.3.2. OFFoperate

- Make sure that the load equipment has stopped working, and then turn offSC20Power supply for the controller.
- Turn off the power to the load device.

Chapter 7 Confirmation before operation

7.1.confirm powerONand network establishment

-Follow the steps below to turn on the power.

- connectSC20Power supply for the input and output devices of the controller.
- Turn on the power of the servo drive.
- turn onSC20Power supply for the controller.
- After turning on the power, please confirmSC20Controller action status displaylednormalrunstate.

Chapter 8 About U Disk Operation

8.1. Udisk insertion method

1.Snap the side of the battery cover by hand.		
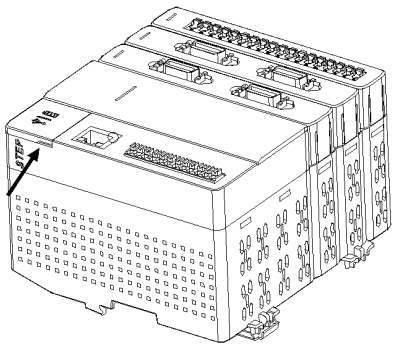	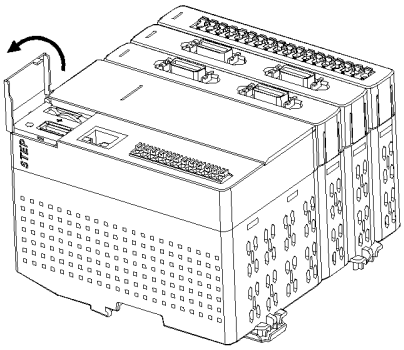	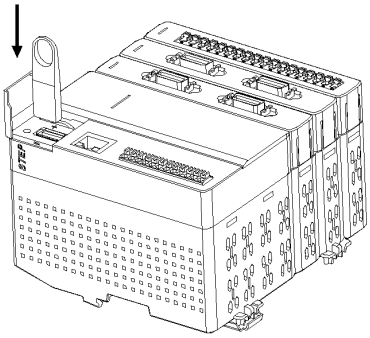

8.2. Ucopy file operation

Please refer to the software manual.

Chapter 9 About System Reset

9.1.passSC20The reset button of the host resets the device

-reset button atSC20s position

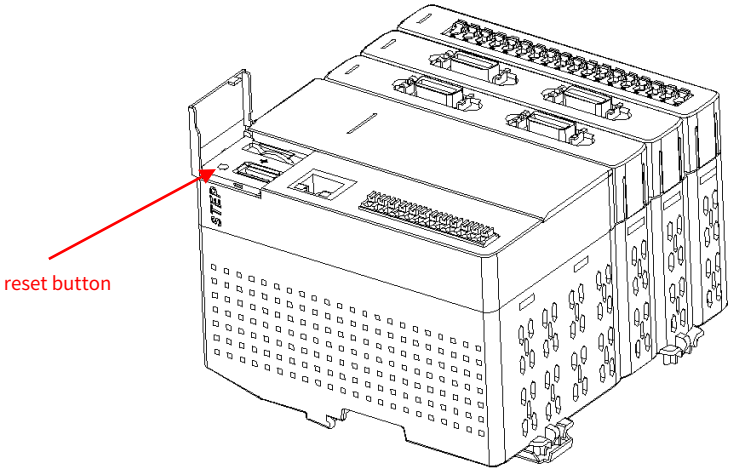

-Key Function

project		Reset button long press operation time	result
at startup	key operation	Press2s	does not startcodesysproject
	InsertUplate	UThere is firmware to be upgraded on the disk	EnterUdisk update system firmware
running		2s	stop the current program

Chapter 10 Troubleshooting

10.1.system status

ledlamp	main module status	deal with
Always bright blue	normal	
Always bright red	Program exception	Please check the systemLoglog
red blue green	undefined	

ledlamp	slave module	deal with
Always bright blue	works fine	
Always bright red	working abnormally	Please check the status of the software
flashing blue	in communication	

10.2.exception handling method

Conventional processing method:

1.In the left view, double-click the node in question, and under Online Status, check the status. Analyze the operation according to the error prompt.

2.Turn on the systemLoglog, check the error message.

3.If you still can't solve it, please contact the after-sales service.

Phenomenon	possible processing
Can't log in to the controller	confirmPCon the same network segment as the controller, andIPNo repetition; restart the gateway; Turn off the emulation mode of the controller; If the user has an illegal program, press and hold the reset button when the machine is turned on.
main panel displayIDLE, do not run the program	download user programs; User illegal program, download after modification
main moduleledred light	View SystemLogLog Analysis Reason
slave moduleledred light	Please check the software status analysis reason
During system startup, it stops at the startup screen	Firmware upgrade failed, or key files were manually deleted. Please contact after sales.

- Please provide the basic software version number, hardware model, and logLogView in.

Chapter 11 Maintenance and Inspection

11.1.an examination

To ensure optimum use, perform daily or periodic inspections.

-Check item

Check item	Check the content	Judgment standard
installation status	DINInstallation and looseness on the guide rail, loose unit shake, shake	should be installed properly.
Connection Status	loose connector	There should be no looseness in the connector part.
surroundings	Ambient temperature, cabinet temperature Ambient humidity, humidity inside the cabinet	- 5°C~+55°C 10%RH~90%RH There should be no dust and corrosive gas.

Chapter 12 Specifications and Dimensions

12.1.Application Environment Specifications

project	Specification
Rated voltage	24V DC
Voltage allowable range	20.4V DC~28.8V DC
Use ambient temperature	- 5°C~+55°C
save ambient temperature	- 20°C~+80°C
Use ambient humidity	10%RH~90%RHnon-condensing
Save ambient humidity	10%RH~95%RHnon-condensing
use altitude	0-2km(no limit)
	> 2km(ambient temperature per100mreduce0.5°C)
Protection class	IP20
pollution level	IE33
Atmospheric pressure	86Kpa~106Kpa
Use environment	There should be no corrosive gases. There should be no heavy dust.
EMCAnti-interference level	implementEN61000-6-X
weight	<0.5kg

12.2.Performance Specifications

project		Specification Description
processor frequency		480MHz
RAMcapacity		32M
FLASHcapacity		16M
Power-down protection data size		32K
Power-down protection program mode		FlashKeep
Power-off hold power-on waiting time		35s
power input		DC22V-28Vmaximum1A
instruction cycle		2ns
Module composition	Maximum number of points	384indivual
	Maximum number of local bus modules	8
	Remote supportEtherCATmaximum number of nodes	32indivual
sport control	Maximum number of axes	14axis
	Maximum number of pulse axes	4
	1mswith number of axes	8
	Number of linkage interpolation axes	5
	EtherCATShaft control minimum cycle	120us
	CNC+PLCOpen(Electronic cam, axis group, etc.)	support
Support interface		RS232/RS485/CAN
Industrial bus		EtherCAT/Modbus
Edge Computing/IoT		support
develop software		STEP Automation Studio (codesys)

-List of current consumption

unit type		current consumption	Current increasing part
SC20Controller stand-alone	— —	0.2A	— —
When connecting an expansion board	Local expansion digital input board	— —	0.1A
	Local expansion digital output board	— —	0.1A
	Local extended analog input and output plate	— —	0.1A

12.3.SC20Specifications of the controller body

12.3.1. SC20Controller high-speed input specifications

project	Specification	
	enterA,B,ZSignal	
	24V DC	5V DC
Insulation method	optocoupler isolation	
Rated input voltage	24V DC	5V DC
Use voltage range	20.4V DC~28.8V DC	3.5V DC~5.5V DC
input resistance	4.7kΩ	510Ω
minimumONVoltage /minimumONcurrent	10V DC /4mA	3V DC /4mA
maximumOFFVoltage /maximumOFFcurrent	2V DC /2mA	1V DC / 0.5mA
public end	Independent public terminal of each point	
Fastest supported frequency	4Mbps	

12.3.2. SC30High-speed (pulse) output specifications of the controller

project	Specification
Control loop voltage	5VDC
Rated load current	0.1A/point
ONMaximum voltage drop when	0.2V
OFFleakage current	0.1mAthe following
Output frequency	4Mbps
public end	4point/1public

12.3.3. SC20Controller input specifications

	project	Specification
digital input	Insulation method	optocoupler insulation
	Rated input voltage	24V DC
	Rated input current	less than6mA(24DC)
	input resistance	4.7kΩ
	OFFVoltage /OFFcurrent	2.4V /1mA
	ON/OFFResponse time	> 0.01ms(less than10k)
	I/ORefresh method	SynchronizeI/ORefresh or free run refresh optional
	public end	12point/1public
	I/OConnection method	Push-in connector
Analog input ·	input channel	2
	voltage	0-10V
	Voltage input impedance	10k
	Voltage input range	0-10V
	Resolution	12bit
	sampling time	1ms
	precision	±1%full precision
	limit voltage	+15V
	Maximum common-mode voltage between channels	15V
	isolation method	I/OBetween terminal and power supply: capacitive separation Between channels: non-isolated (including analog and digital and simulation and simulation)
	public end	2point/1public
	I/OConnection method	Push-in connector

-The input of the controller body is simultaneouslyONLimit of Points (Maximum Points32,Without2point simulation)

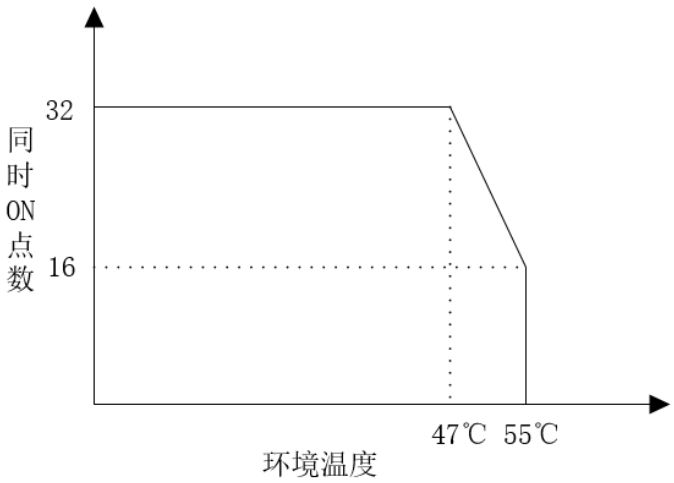

12.3.4. SC20Controller output specifications

project	Specification
Insulation method	optocoupler isolation
output form	NPNoutput type
Working load voltage range	20.4V DC~28.8V DC
Maximum load current	0.5A
Maximum surge current	1A
I/ORefresh method	SynchronizeI/ORefresh or free run refresh optional
ONmaximum voltage drop at	1Vthe following
ON/OFFResponse time	> 0.01ms(less than10k)
circuit protection	overcurrent, overvoltage, short circuit
public end	4point/1public
I/OConnection method	Push-in connector

-The output of the controller body is simultaneouslyONLimit of Points (Maximum Points12)

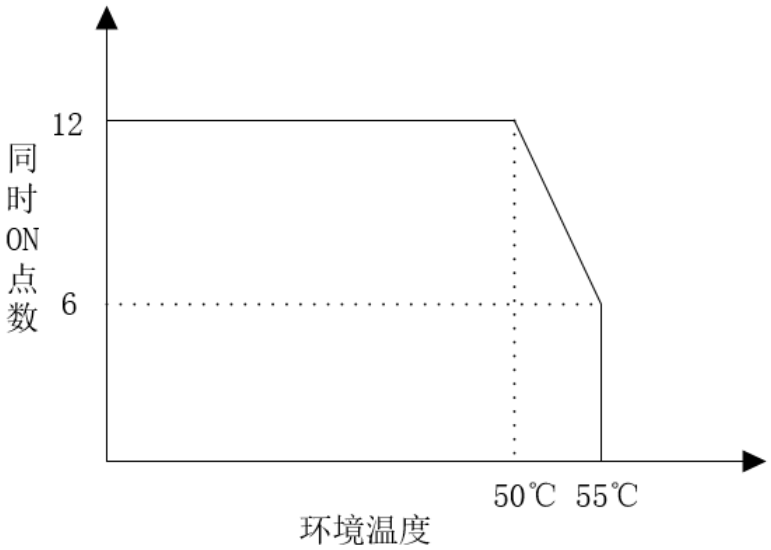

12.4.Specifications of Expansion Modules

12.4.1.Specifications of Local Expansion Digital Input Board

project	Specification
Insulation method	optocoupler insulation
Rated input voltage	24V DC
Rated input current	less than6mA(24DC)
input resistance	4.7kΩ
OFFVoltage /OFFcurrent	2.4V /1mA
ON/OFFResponse time	> 0.01ms(less than10k)
I/ORefresh method	SynchronizeI/ORefresh or free run refresh optional
Power supply mode	bottom bus
Protective function	overcurrent, overvoltage, short circuit
public end	16point/1public
Power supply mode	bottom bus
I/OConnection method	Push-in connector

-The input of the local expansion digital input board is simultaneouslyONLimit of Points (Maximum Points16)

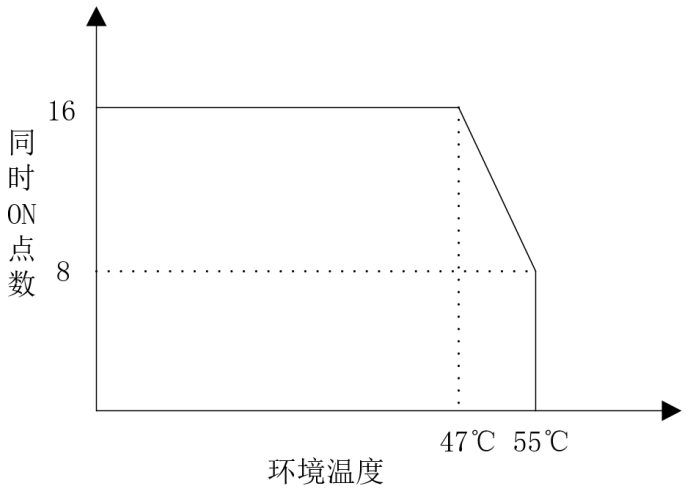

12.4.2.Specifications of Local Expansion Digital Output Units

project	Specification
Insulation method	optocoupler isolation
output form	NPNoutput type
Working load voltage range	20.4V DC~28.8V DC
Maximum load current	0.5A
Maximum surge current	1A
I/ORefresh method	SynchronizeI/ORefresh or free run refresh optional
ONmaximum voltage drop at	1Vthe following
ON/OFFResponse time	> 0.01ms(less than10k)
circuit protection	overcurrent, overvoltage, short circuit
public end	16point/1public

-The output of the local extended digital simultaneouslyONLimit of Points (Maximum Points16)

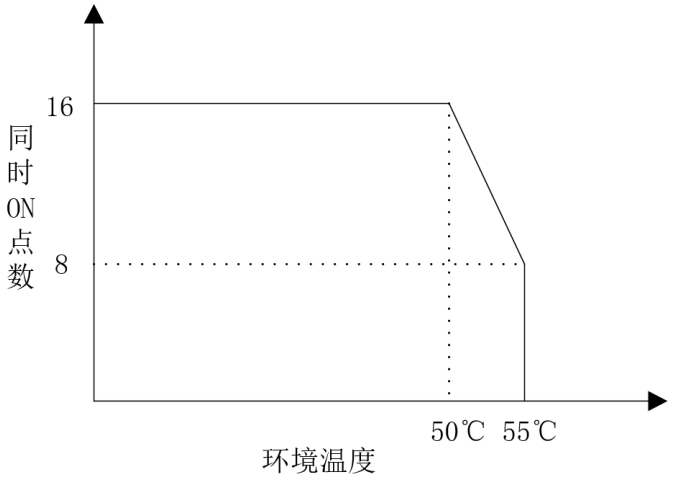

12.4.3.Specifications of Local Extended Analog Hybrid Units

project		Specification
input specification	input channel	8
	voltage	0-10V
	internal5VPower consumption	0.1A
	Voltage input impedance	10k
	Voltage input range	0-10V
	Resolution	12bit
	sampling time	40us/aisle
	precision	0.005V
	limit voltage	+15V
	Maximum common-mode voltage between channels	15V
	isolation method	I/OBetween terminal and power supply: capacitive separation Between channels: non-isolated
output specification	output channel	4
	voltage	24V DC(20.4V~28.8V DC)
	internal5VPower consumption	0.1A
	Voltage output load	1kΩ~1MΩ
	Voltage output range	0-10V
	precision	0.005V
	Resolution	12bit
	Conversion time	40us/aisle
	isolation method	I/OBetween terminal and power supply: capacitive separation Between channels: non-isolated
	Output short circuit protection	none
Power supply mode		5Vcontrol the electrical bottom bus,24VTerminal power supply
I/OConnection method		Push-in connector

-Local expansion of the input of the analog mixing unit simultaneouslyONLimit of Points (Maximum Points8)

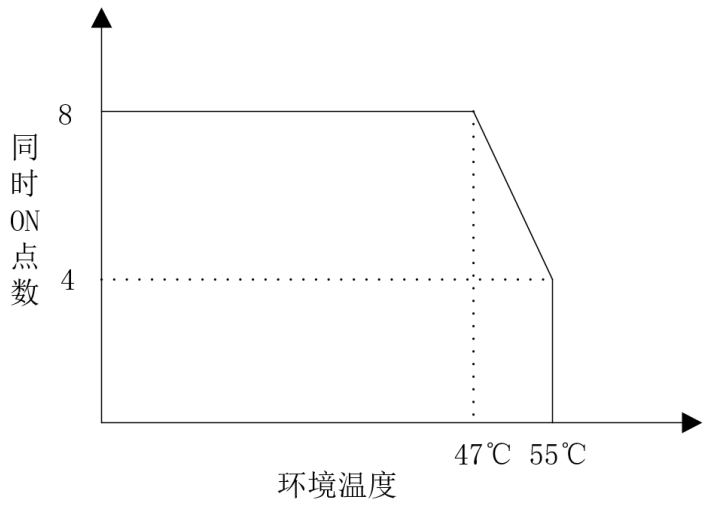

-Local expansion of the input of the analog mixing unit simultaneouslyONLimit of Points (Maximum Points4)

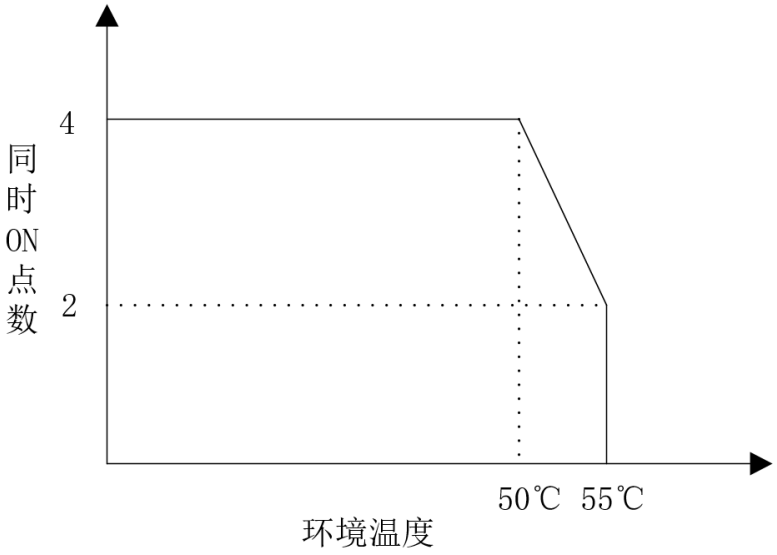

12.5.Communication Specifications

12.5.1. USBPort Specifications

project	Specification
standard	USB2.0 Fullspeed
connector shape	AtypeUSB

12.5.2. COMPort Specifications

- **RS-232Port Specifications**

project	Specification
CHnumber	1
physical layer	RS-232
Transmission distance	maximum15m
Communication type	1:1communication
way of communication	half duplex
transmission line	Multi-core shielded wire
transfer speed	9600/19200/38400/57600/115200bps
Connector method	Push-in connector

- **RS485Port Specifications**

project	Specification
CHnumber	1
physical layer	RS-485
Transmission distance	1000m(19.2kbps)/100m(115.2kbps)
Communication type	1:1communication
way of communication	half duplex
transmission line	Multi-core shielded wire
transfer speed	The maximum transfer rate is115.2kbps
Connection method	Push-in connector

-CANPort Basic Specifications

project	Specification
CHnumber	1
physical layer	CAN
Transmission distance	maximum15m
Communication type	1:ncommunication
way of communication	half duplex
transmission line	Multi-core shielded twisted pair
transfer speed	10K/20K/50K/125K/250K/500K/800K/1Mbps
Connection method	Push-in connector

12.5.3. LANPort Specifications

project		Specification
port definition		1roadethernet(can be use onEtherCAT)
default address		STEP.Eth1.IPdefault address192.168.0.11
Communication Interface		Ethernet
communication speed		100Mbps/10Mbps Auto-negotiation
physical layer		100BASE-TX
Transmission distance		100m(Maximum size is100m,In some use environments, anti-interference measures such as installing ferrite cores are required. Also, it is recommended to set up the hub near the control panel and10mused inside)
Communication Cable		Twisted pair cable (shielded:STP): 5eclass or higher
letter of agreement		TCP/IP
Number of slave connections		— — — — (EtherCATThe maximum number of slaves is8indivual)
Topology		Linear topology
way of communication		Full duplex/half duplex mode
TCP/IPprotocol		meets theTCP/IP(IPV4)
Function		Change, maintain network settings (IP,Subnet,Gateway) Ethernet Same/different network settings can be set between ports EthernetNo routing between ports
ledshow	LINK	whenEthernetLights up when a connection is established between devices on
	ACT	Blinks when various types of communication, such as command and response transmission and reception are performed with the connected device

12.6.Other specifications

12.6.1. UDisc specification

project		Specification
Uplate	Maximum capacity supported	unlimited
	Supported Standards	USB2.0
	motion detection	none

12.7.Dimensions

12.7.1. SC20Dimensional drawing of the controller

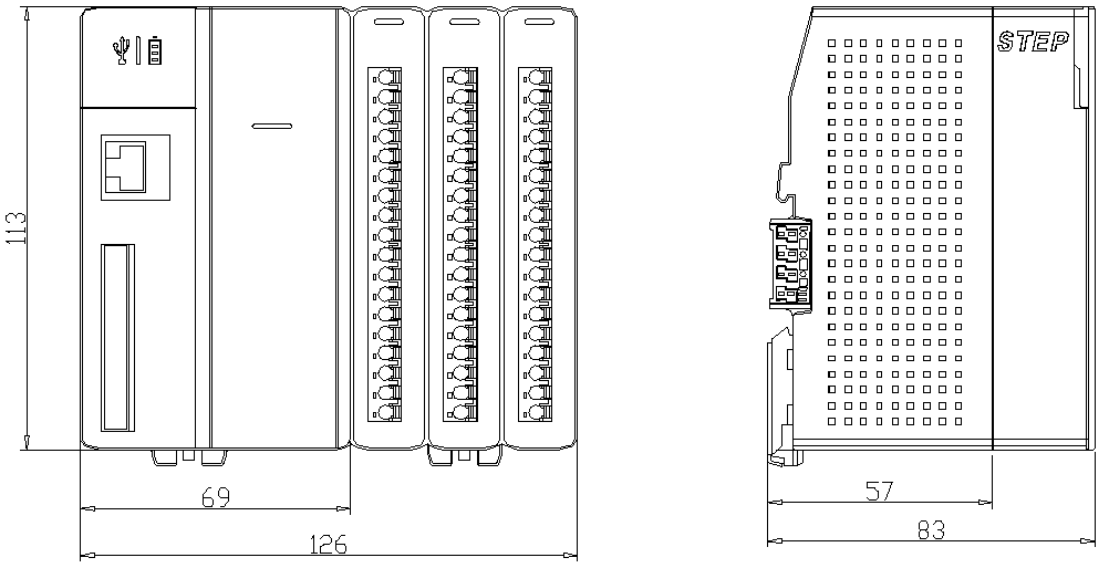

12.7.2. SC20Dimensional Drawings of Local Expansion Modules

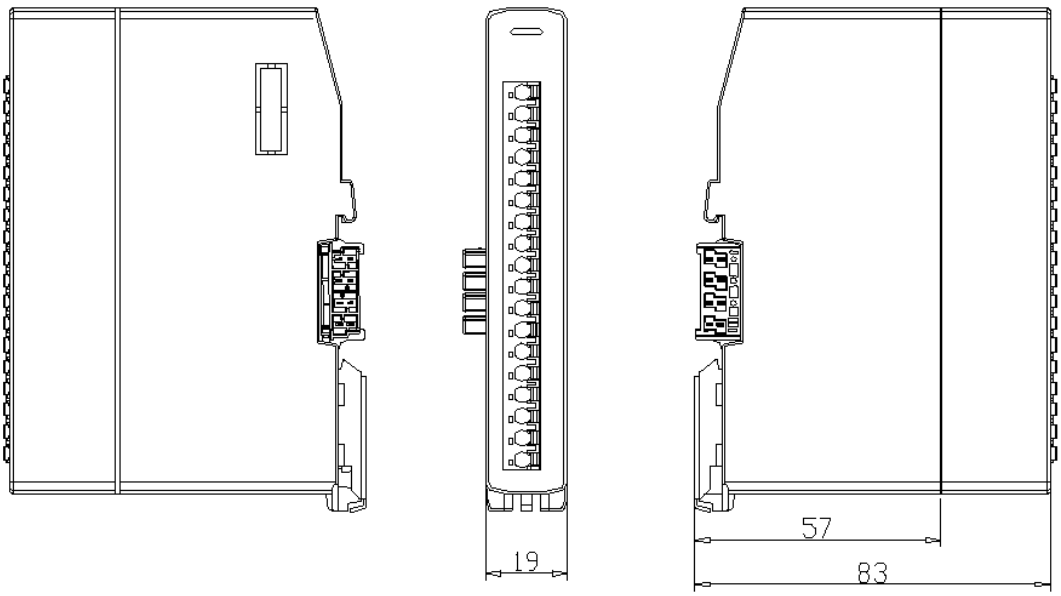

Chapter 13 Appendix 1 Upgrade/Warranty Notes

13.1.Warranty

-Warranty time

Product quality warranty period is after purchase1Year or the month of our company's production1year6within a month.

-Warranty

During the warranty period, if the fault occurs due to our company, our company will replace or repair the faulty part of the purchased machine. In addition, the above-mentioned responsibilities of our company are limited to the replacement and repair of the purchased equipment, and our company is not responsible for any damage to your company or a third party caused by the failure of the purchased equipment.

In addition to the matters stated in the "Warranty Period", our company will not be held responsible for any of the following situations in which the equipment is not in good condition and causes damage to your company or a third party.

1.When the machine is not assembled or used in accordance with the instructions or precautions described in this specification book

2.When the machine does not match the product assembled in the machine

3.When the items that depend on your company cannot be dealt with in this specification book

4.Others, when the machine is in poor condition not caused by our company

-Notes on use

- Precautions when exporting this product and the machine on which it is installed
- When the end user or end use of this product is related to military or weapons, it shall be stipulated in the "Japan Foreign Exchange and Foreign Trade Control Law". subject of export regulations. Therefore, when exporting such products, please conduct a sufficient examination and go through the necessary export procedures.
- This product is produced for general industrial products, etc., and is not designed and produced for use in machines and systems related to human life. of.
- Setting, wiring, operation, maintenance and spot check, etc., should be carried out by experts with knowledge of product use.
- Install safety devices when it is predicted that a serious accident or loss of equipment may occur due to a malfunction of this product.
- This product is designed for general industrial products, etc. Do not use for atomic energy control, aerospace machines, transportation machines equipment, medical equipment, safety devices, etc., machines related to life safety, and special environments.
- Since the wiring condition (grounding method, cable length, shielding condition of the signal wire) may affect the anti-noise performance, please confirm the Check the noise immunity of the machine.
- Depending on the contents of the malfunction of this product, there may be smoke as much as a cigarette. When using it in a clean room, etc., please consider.
- Overloading the product will cause the goods to fall, please handle according to the label.
- Volatile oils, thinners, alcohol, acidic and alkaline detergents will cause discoloration or damage to the outer packaging, so please do not use it.
- Please dispose of it as industrial waste.

- Appropriateness of laws and regulations regarding the finished machine, and matching of the structure, dimensions, life, characteristics, etc. of the installed machine and parts

  In this case, please confirm by yourself.

- Please note that normal operation of the product cannot be guaranteed when used beyond the specifications of this product.

- The contents of this manual (model, software version, etc.) may be changed without prior notice due to reasons such as product performance improvement.

13.2.Repair and maintenance

- For repair and maintenance, please contact the product agent first;
- If the product has been installed in the equipment, please contact the equipment manufacturer first.

13.3.Technical Services

- Customer technical consultation

Telephone:(86)13917890469(Jonggong) Consultation time: Monday to Sunday9:00--17:30(Except certain holidays)

- After-sales technical and maintenance consultation (repair of faulty parts, purchase of repair parts and optional accessories)

after sales support:400-168-2718

purchase enquiry:13925286547Manager Zhou

Consultation time: Monday to Sunday9:00--17:30(Except certain holidays)

- Internet technical information